simon

2-way switch 10A 250V~ for half element with fast terminal connection system white Simon 27 Play

REF. **27201-64**

simon

simon

BASIC INFORMATION

DESCRIPTION

2-way switch of 10AX and 250V of voltage in white colour of the Simon 27 Play series. It has a quick terminal connection and its type of operation is tilting. As far as its installation is concerned, you must perform or on the surface-mounted or by recessed. This 2-way switch is fully compatible with the frames Simon 27 Play, Simon 27 Neos, Simon 27 Scudo, Simon 27, Simon 27 Centralizations and Simon 44 Aqua and offers the possibility of replacing the finish of the supplied rocker with 5 additional finishes available. It measures 22.5x45 mm and is made of metal components with halogen-free thermoplastic insulation and thermoset trim and according to the following standards EN 60669-1: 1999 + A1: 2002 + A2: 2008 + EN 50581: 2051. It works perfectly in rooms with a temperature located between 5 and 40ºC, although it is capable of withstanding extreme temperatures of -25 to 50ºC, approximately. To clean it, need a soft, dry cloth and never use abrasive cleaners with chlorine.

FINISH

White

COMPATIBILITY

Simon 27 Play, Simon 27 Neos, Simon 27 Scudo, Simon 27, Simon 27 Centralisations and Simon 44 Aqua frames

PACKAGING CONTENTS

Mechanism with rocker

ETIM CLASS

EC001590

REMARKS

Possibility of substituting the finish of the rocker supplied with a different one. 5 additional finishes available.

TECHNICAL INFORMATION

AVAILABLE MARKET

CE

CABLE SECTION ADMITTED (MM)

From 1,5 to 2,5 mm

NUMBER OF POSSIBLE ELEMENTS

Half element

INDICATOR FUNCTION

No

CURRENT (A)

10 AX

IP RATING

IP21

MAINTENANCE

Clean with a soft, dry cloth. Do not use abrasive cloths or cleaning products that contain chlorine.

TYPE OF MECHANISM

Pivoting

NOMINAL VOLTAGE (V~)

250 V~

OPERATING TEMPERATURE RANGE (ºC)

5 - 40 ºC

STORAGE TEMPERATURE RANGE (ºC)

-25 - 50 ºC

VERSION

Single

simon

INSTALLATION AND MAINTENANCE

CABLE STRIPPING NECESSARY (MM)

11

CLAW

Simon 27

INSTALLABLE IN FLUSH MOUNT JUNCTION BOX

Universal, American, Small spaces and Centralisations

INSTALLATION DIRECTION

Horizontal, Vertical

INSTALLATION TYPE

Suitable for surface and flush mounting

TYPE OF TERMINAL CONNECTION - FUNCTION 1

Fast

REGULATIONS

REGULATIONS

Dir. 2014/35/UE LVD|Dir. 2011/65/UE RoHS + post. mod.|EN 60669-1:2018|EN IEC 63000:2018

LOGISTICS INFORMATION

UNITARY EAN CODE
8421053251768

UNITARY PACKAGING HEIGHT
22.6

UNITARY PACKAGING WIDTH
38.1

UNITARY PACKAGING LENGTH
45.5

UNITARY PACKAGING MEASUREMENT UNIT
MMT

UNITARY PACKAGING VOLUME
0.039

UNITARY PACKAGING VOLUME UNIT
MMQ

UNITARY PACKAGING GROSS WEIGHT
0.024

PRODUCT NET WEIGHT
0.024

UNITARY PACKAGING WEIGHT UNIT
KGM

PACKAGING EAN
8421053035528

UNITS CONTAINED PACKAGING
20

PACKAGING HEIGHT
53

PACKAGING WIDTH
105

PACKAGING LENGTH
220

PACKAGING MEASUREMENT UNIT
MMT

PACKAGING VOLUME
1.224

PACKAGING VOLUME UNIT
DMQ

PACKAGING GROSS WEIGHT
0.481

PACKAGING NET WEIGHT
0.48

PACKAGING WEIGHT UNIT
KGM

MECANISMOS SIMON 27, 28 Y 44

Mecanismos básicos / Basic switches

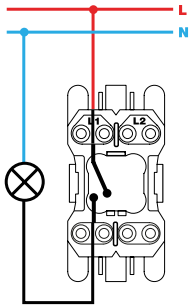

Interruptor unipolar / Single-pole switch
XX00101-XX

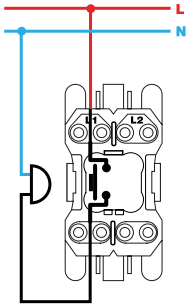

Pulsador / Push button switch
XX00150-XX

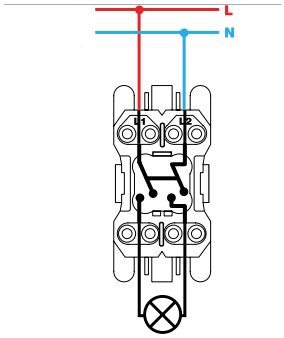

Interruptor bipolar / Double pole switch
XX00133-XX

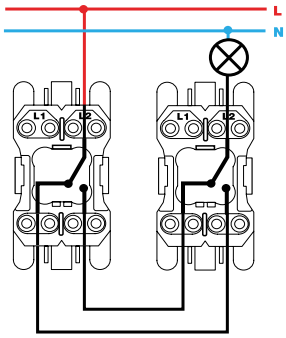

Conmutador / 2-way switch
XX00201-XX

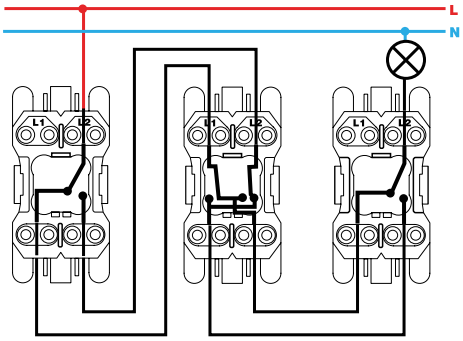

Conmutador cruce / Intermediate switch
XX00251-XX

Mecanismos con piloto / Pilot switches

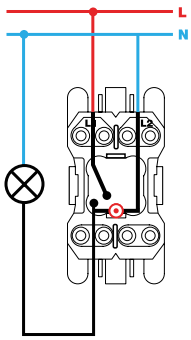

Interruptor unipolar / Single-pole switch
XX00102-XX

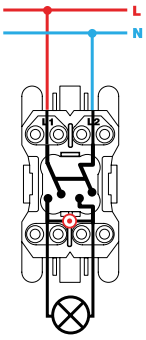

Interruptor bipolar / Double pole switch
XX00134-XX

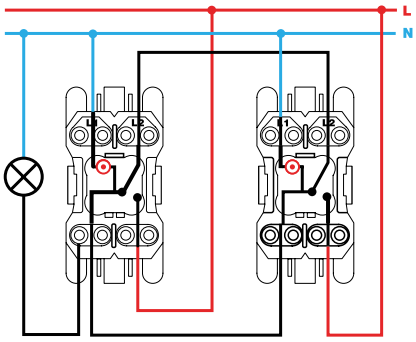

Conmutador / 2-way switch
XX00202-XX

Mecanismos con luminoso / Switches with light

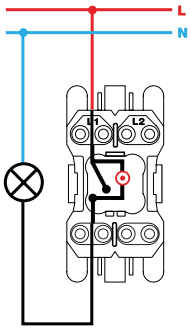

Interruptor unipolar / Single-pole switch
XX00104-XX

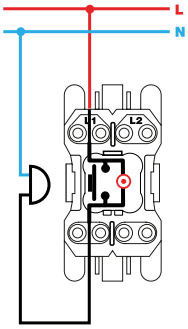

Pulsador / Push button switch
XX00160-XX

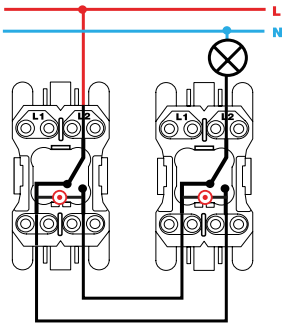

Conmutador / 2-way switch
XX2700204-XX

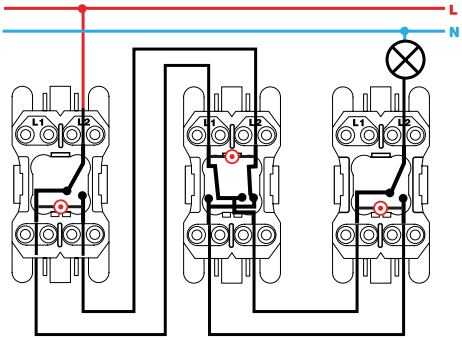

Conmutador cruce / Intermediate switch
XX2700254-XX

VISTA FRONTAL E ISOMÉTRICA DEL PRODUCTO

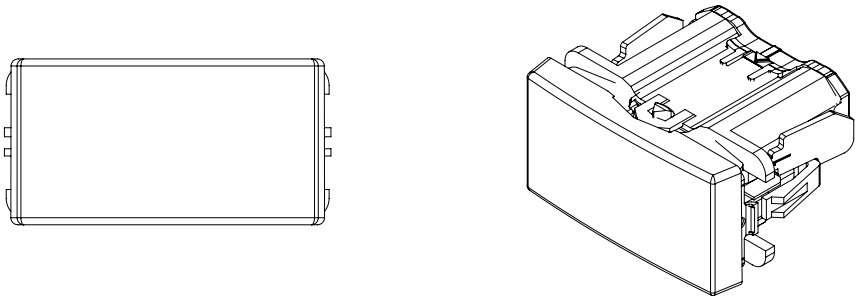

DIAGRAMA DE MONTAJE

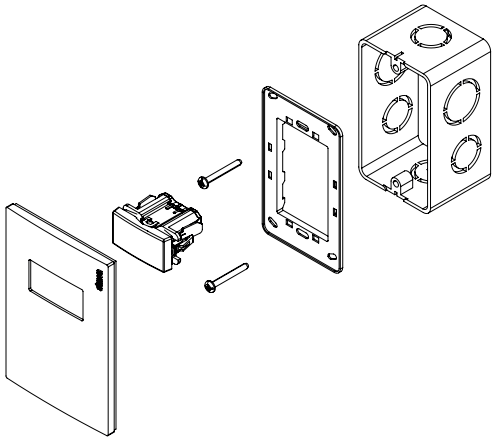

*Placa y chasis NO incluidos
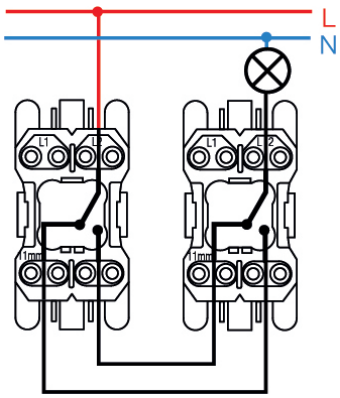
DIAGRAMA DE CONEXIÓN