Cover for double fiber optic connector white matte Simon 360

REF. **36000546-190**

BASIC INFORMATION

DESCRIPTION

Cover for double fiber optic connector in white finish from the Simon 360 series. The matte finish, in addition to being trendy and integrating into any environment, prevents light reflections and reduces maintenance by minimizing stains and fingerprints. Soft and high-quality touch that provides a sophisticated product feel in all colors of the series. Urea is the main material and has high resistance and durability, ensuring a prolonged useful life. Cover designed for installation in Simon 75 mechanisms.

FINISH

Matt white

COMPATIBILITY

Mecanismos Simon 75

MATERIAL

Steel,Thermoplastic

ETIM CLASS

EC000018

REMARKS

Available in 3 matte finishes s360. Frame available in the same color as the selected interior to create a single-color set or the possibility of a bicolor set. For cleaning, it is recommended to use a cloth slightly dampened with soapy water, avoiding the use of abrasive cloths or cleaners containing chlorine, to prevent damage to the product's surface.

TECHNICAL INFORMATION

FORMAT
Optical fiber

IP RATING
IP20

MAINTENANCE
Clean with a soft, dry cloth. Do not use abrasive cloths or cleaning products that contain chlorine.

INSTALLATION AND MAINTENANCE

REMOVAL OF COVER
Only with tool

LOGISTICS INFORMATION

UNITARY EAN CODE
8421053437735

UNITARY PACKAGING HEIGHT
83

UNITARY PACKAGING WIDTH
43.5

UNITARY PACKAGING LENGTH
81

UNITARY PACKAGING MEASUREMENT UNIT
MMT

UNITARY PACKAGING VOLUME
292450.5

UNITARY PACKAGING VOLUME UNIT
MMQ

UNITARY PACKAGING GROSS WEIGHT
0.04

PRODUCT NET WEIGHT
0.04

UNITARY PACKAGING WEIGHT UNIT
KGM

PACKAGING EAN
8421053437742

UNITS CONTAINED PACKAGING
5

PACKAGING HEIGHT
92

PACKAGING WIDTH
84.5

PACKAGING LENGTH
223

PACKAGING MEASUREMENT UNIT
MMT

PACKAGING VOLUME
1733602

PACKAGING VOLUME UNIT
MMQ

PACKAGING GROSS WEIGHT
0.192

PACKAGING NET WEIGHT
0.19

PACKAGING WEIGHT UNIT
KGM

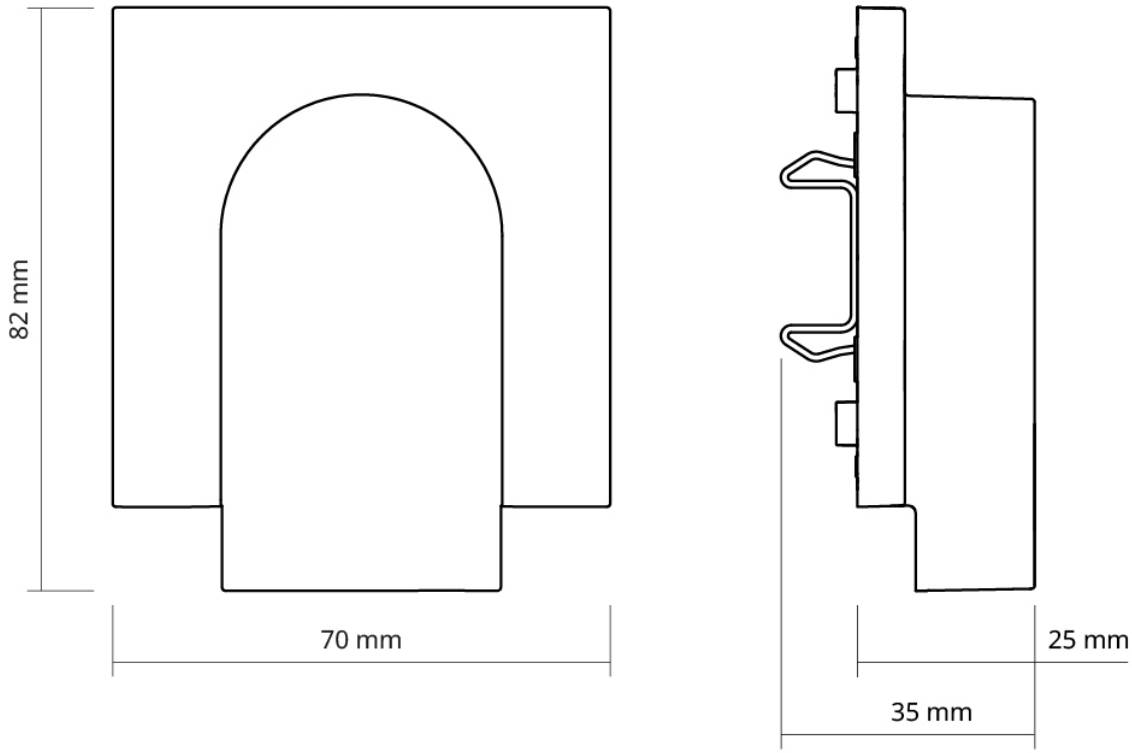
82 mm
70 mm
25 mm
35 mm