Shallow floor box kit raised/concrete floor 6 elements 1 double socket, 1 dual UPS, 2 plates 2 RJ45 grey Simon 500 Cima

REF. **52006316-030**

BASIC INFORMATION

DESCRIPTION

Model 52006316-030 wall box Belonging to the aserie professional components Simon 500 Cima. Element Designed for flush mounted installation both in concrete floor and Flush installation in raised floor. It is a kit Floor box for shallow version for 6 elements gives a capacity. 1 double socket in Schuko format, 1 element UPS/UPS (uninterruptable power supplies) double plates for 2 elements RJ45 with Keystone snap-fit I, II, ATT ® / Avaya ®. Material in plastic and finishes in tonality grey, integrated components Components with self-extinguishing and halogen-free thermoplastic insulation. Providing greater security professional Its design for floor box Shallow allows its installation for all types of floor, being advisable in Concrete the combination with plastic tray (ref.G301C). It measures Professional Ø 300 mm x 69 mm, easy to adapt to different kinds of Surfaces and work environments professionals.

FINISH

Grey

COMPATIBILITY

Simon 500 CIMA mechanisms

ETIM CLASS

EC000024

MATERIAL

Plastic

PACKAGING CONTENTS

Kit and installation manual

REMARKS

To install the product in concrete floor it must be combined with a plastic tray (ref.G301C). Alternatively, it may be combined with flush-mount trim cover (ref.52053203-035) in cases where the same floor lining is not installed.

simon

TECHNICAL INFORMATION

AVAILABLE MARKET
CE

CABLE SECTION ADMITTED (MM)
From 1,5 to 2,5 mm

PROTECTION AGAINST DIRECT ACCESS OF CONTACTS
No

PROTECTION AGAINST ENTRY OF DUST AND SMALL OBJECTS
Yes, thanks to the inclusion of ductile plastic wire outputs

NUMBER OF CLAMP-HOLDER HOLES
6

NUMBER OF CONNECTIONS PER TERMINAL
1 terminal connection for click terminal connection system and 2 terminal connections for the fast terminal connection system

COMPATIBLE WITH CONNECTORS
Simon©, AMP netconnect© Standard 110, SL110, SL Tool-less, 216000 and 216005, Brand-Rex©, ADC Krone© KM8 Keystone, BeldenCDT© Giga Flex Keystone, Ersys©, General Cable©, Molex©, Panduit© Netkey, Ortronics© Clarity TechChoice Keystone, Rit© and other manufacturers with Keystone snap-fit system.

NUMBER OF CONNECTORS
4

RJ45 CONNECTORS
Not included

DIELECTRIC STRENGTH
No holes or contours, with 2000V at 50 Hz for 1 minute

MAX TEMP DURING CONSTRUCTION WORK (ºC)
+90 ºC

DUST SHUTTER
Yes

FORMAT
Schuko

HEAT RESISTANCE (ºC)
+125 ºC (in accordance with standard IEC 60695-10-2)

IK CLASSIFICATION
08

INDICATOR FUNCTION
Yes

INSULATION RESISTANCE (V-MΩ)
>5 MOhms at 500V

CURRENT (A)
16 A

IP RATING
IP4X

LED CONSUMPTION INDICATOR (MA)
0.55

MAINTENANCE
Clean with a soft, dry cloth. Do not use abrasive cloths or cleaning products that contain chlorine.

TEMPERATURE RANGE DURING INSTALLATION (ºC)
-5 to 60 ºC

TYPE OF MECHANISM
Insertion

NUMBER OF MODULES
6 modules

NUMBER OF PLATES
2 voice and data plates

PLATE TYPE
Flat

NUMBER OF PRE-PUNCHED HOLES 55 X 20 MM
6

RAL
7011

RECESS DIMENSION (MM)
Ø 300 mm

RJ45 ADAPTOR MODULE
Included in voice and data plates

NUMBER OF SIDE ENTRANCES
6

SNAP-FIT RJ45 PLATES
Keystone I, II, ATT®/Avaya®

SNAP-FIT TYPE
Keystone I, II, ATT®/Avaya®

NUMBER OF SOCKETS
2 double sockets: 1 double socket for standard current circuit and 1 double socket for stable current circuit

VERSION
6 elements

INSTALLATION AND MAINTENANCE

CABLE STRIPPING NECESSARY (MM)

0

CLAW RANGE OF OPERATION (MM)

Between 11 and 48 mm

REMOVAL OF CONNECTOR

NUMBER OF COVER OPENING POSITIONS

3

EXTINGUISHING (ºC)

+850 ºC / 30 seconds (GWFI in accordance with standard IEC 60695-2-11)

TYPE OF FASTENING

Using fastening claws on the concrete floor tray or on the raised floor tile (supplied with the floor box)

CAN BE INSTALLED IN TRAY

Plástica

INSTALLATION DIRECTION

Circular

INSTALLATION TYPE

Its design for shallow floors allows it to be installed in any type of raised or concrete floor, combining the latter installation type with tray ref. G301C

REMOVAL OF THE PLATE

Only with tool

REMOVAL OF THE SOCKET

Only with tool

TYPE OF TERMINAL CONNECTION - FUNCTION 1

1 click connection (1 click®)

NUMBER OF TERMINALS

3 inputs and 3 outputs

REGULATIONS

REGULATIONS

UNE-EN 60.670-23

LOGISTICS INFORMATION

UNITARY EAN CODE
8421053112717

UNITARY PACKAGING HEIGHT
0

UNITARY PACKAGING WIDTH
0

UNITARY PACKAGING LENGTH
0

UNITARY PACKAGING VOLUME
0

UNITARY PACKAGING GROSS WEIGHT
2.3

PRODUCT NET WEIGHT
2.3

UNITARY PACKAGING WEIGHT UNIT
KGM

PACKAGING EAN
8421053112717

UNITS CONTAINED PACKAGING
1

PACKAGING HEIGHT
0

PACKAGING WIDTH
0

PACKAGING LENGTH
0

PACKAGING VOLUME
0

PACKAGING GROSS WEIGHT
0

PACKAGING NET WEIGHT
2.3

PACKAGING WEIGHT UNIT
KGM

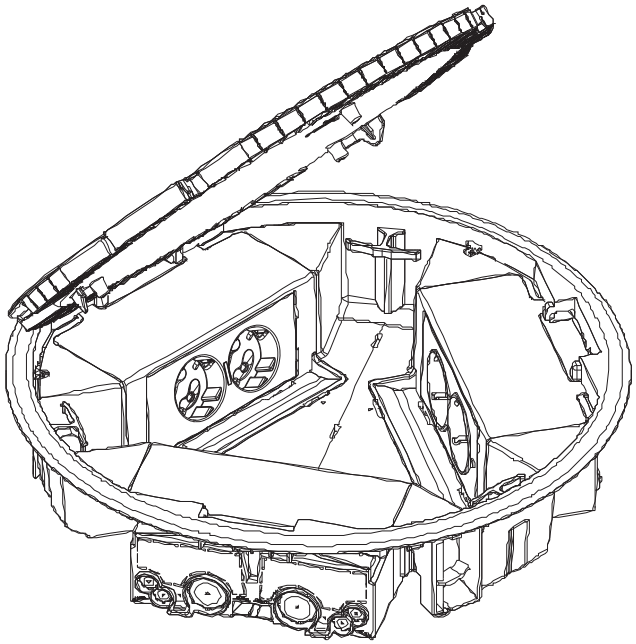

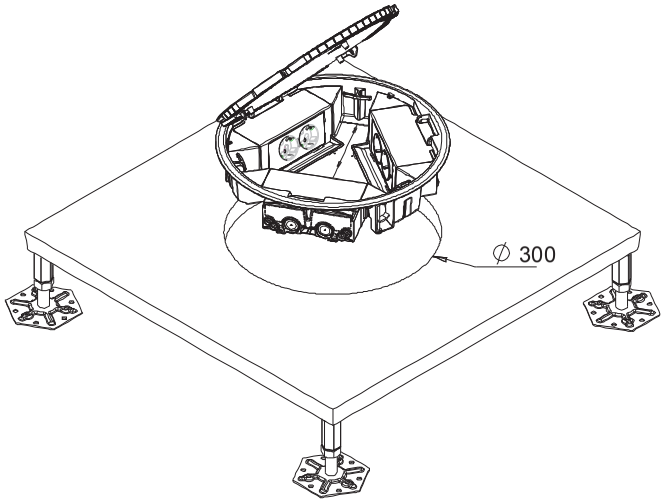
∅ 300

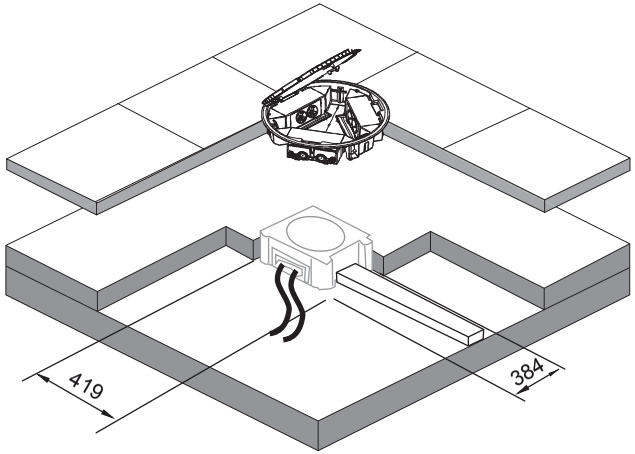
419
384

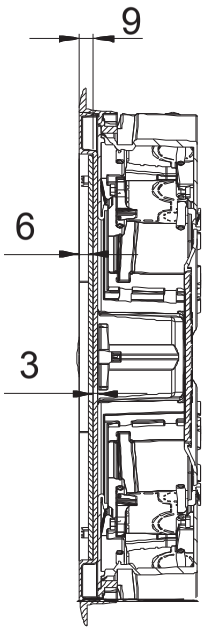
9
6
3

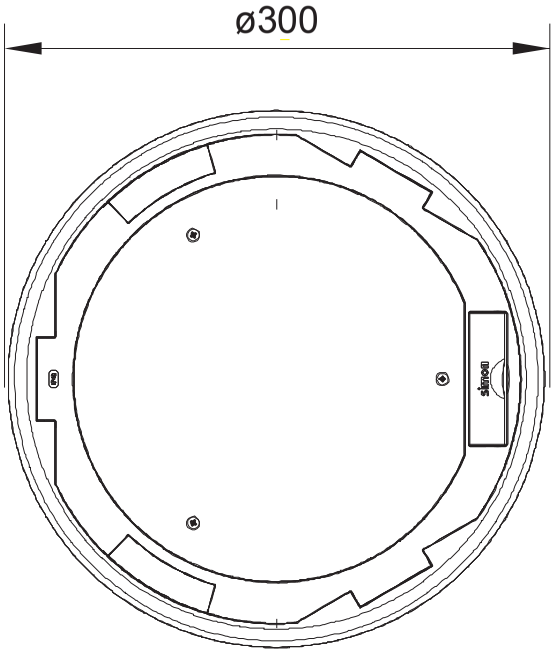
ø300