Plate for heating thermostat aluminium Simon 82

REF. **82505-33**

BASIC INFORMATION

FINISH	MATERIAL	PACKAGING CONTENTS
Aluminium	Plastic	Plate
SYMBOL	**COMPATIBILITY**	**ETIM CLASS**
Without engravings	Simon 75 mechanisms	EC000011

REMARKS

Available in 6 finishes. It is recommended to choose a frame with a base the same colour as the selected rocker.

TECHNICAL INFORMATION

AVAILABLE MARKET
CE

NUMBER OF POSSIBLE ELEMENTS
1 element

INDICATOR FUNCTION
Yes

IP RATING
IP20

MAINTENANCE
Clean with a soft, dry cloth. Do not use abrasive cloths or cleaning products that contain chlorine.

OPERATING TEMPERATURE RANGE (ºC)
5 - 40 ºC

STORAGE TEMPERATURE RANGE (ºC)
-25 - 50 ºC

VERSION
Single

INSTALLATION AND MAINTENANCE

INSTALLATION DIRECTION
Horizontal, Vertical

INSTALLATION TYPE
Suitable for surface and flush mounting

REGULATIONS

REGULATIONS
Dir. 2014/35/UE LVD|Dir. 2014/30/UE EMC|Dir. 2011/65/UE RoHS + post. mod.|EN 60730-2-9:2010|EN IEC 63000:2018

LOGISTICS INFORMATION

UNITARY EAN CODE
8421053259962

UNITARY PACKAGING HEIGHT
0

UNITARY PACKAGING WIDTH
0

UNITARY PACKAGING LENGTH
0

UNITARY PACKAGING MEASUREMENT UNIT
MMT

UNITARY PACKAGING VOLUME
1504126

UNITARY PACKAGING VOLUME UNIT
MMQ

UNITARY PACKAGING GROSS WEIGHT
0.02

PRODUCT NET WEIGHT
0.02

UNITARY PACKAGING WEIGHT UNIT
KGM

PACKAGING EAN
8421053060711

UNITS CONTAINED PACKAGING
5

PACKAGING HEIGHT
81

PACKAGING WIDTH
82

PACKAGING LENGTH
90

PACKAGING MEASUREMENT UNIT
MMT

PACKAGING VOLUME
597780

PACKAGING VOLUME UNIT
MMQ

PACKAGING GROSS WEIGHT
0.1

PACKAGING NET WEIGHT
0.1

PACKAGING WEIGHT UNIT
KGM

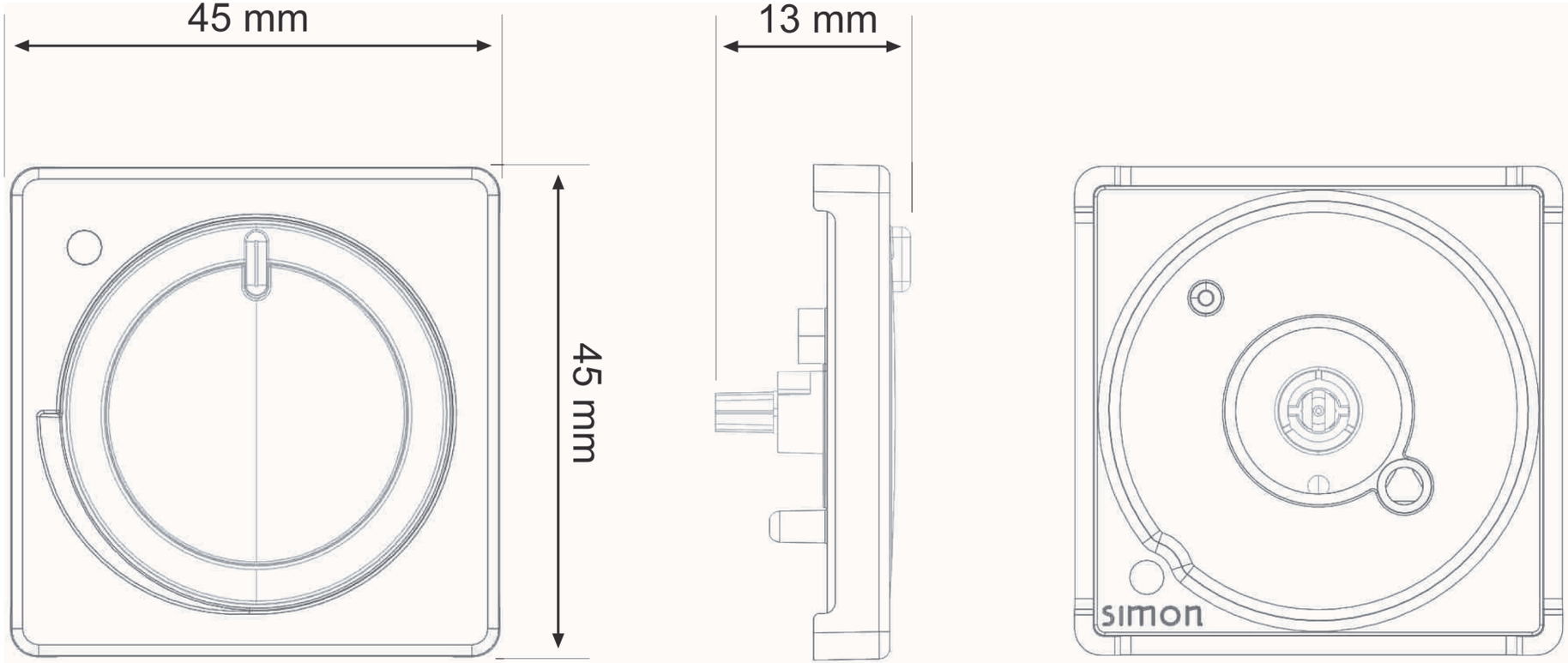
45 mm
45 mm
13 mm
simon