French socket base CLEAN modular 16A 250 V~ with screw terminal connection system Simon 75

REF. **7500456-039**

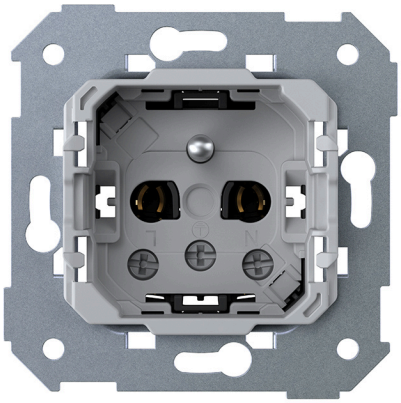

BASIC INFORMATION

DESCRIPTION

French socket base CLEAN modular 16A 250 V~ with screw terminal connection system from the Simon 75 series. With patented Auto-Cover magnetic system: the cover automatically moves when the socket is not in use, returning to its original position. This prevents dirt and facilitates cleaning.

MATERIAL

Plastic,Metal

COMPATIBILITY

Molduras e tampas Simon 360

ETIM CLASS

EC000125

REMARKS

It offers maximum safety as the socket base entry holes are not in contact, only when the plug is inserted.

TECHNICAL INFORMATION

FORMAT
French

IP RATING
IP20

POWER SUPPLY (V~)
250 V~

FREQUENCY
50 - 60 Hz

LINKABLE
Yes

RECESS DIMENSION (MM)
40

INDICATOR FUNCTION
No

MONOBLOCK
No

VOLTAGE (V~)
250 V~

CURRENT (A)
16 A

NOMINAL VOLTAGE (V~)
250 V~

NUMBER OF WIRES
3

INSTALLATION AND MAINTENANCE

CABLE STRIPPING NECESSARY (MM)
14

CLAW
Not possible

REMOVAL OF COVER
Only with tool

TYPE OF TERMINAL CONNECTION - FUNCTION 1
Screw

LOGISTICS INFORMATION

UNITARY EAN CODE
8421053466223

UNITARY PACKAGING HEIGHT
0

UNITARY PACKAGING WIDTH
0

UNITARY PACKAGING LENGTH
0

UNITARY PACKAGING MEASUREMENT UNIT
MMT

UNITARY PACKAGING VOLUME
0

UNITARY PACKAGING VOLUME UNIT
MMQ

UNITARY PACKAGING GROSS WEIGHT
0

PRODUCT NET WEIGHT
0

UNITARY PACKAGING WEIGHT UNIT
KGM

PACKAGING EAN
8421053434642

UNITS CONTAINED PACKAGING
10

PACKAGING HEIGHT
0

PACKAGING WIDTH
0

PACKAGING LENGTH
0

PACKAGING MEASUREMENT UNIT
MMT

PACKAGING VOLUME
0

PACKAGING VOLUME UNIT
MMQ

PACKAGING GROSS WEIGHT
0

PACKAGING NET WEIGHT
0

PACKAGING WEIGHT UNIT
KGM

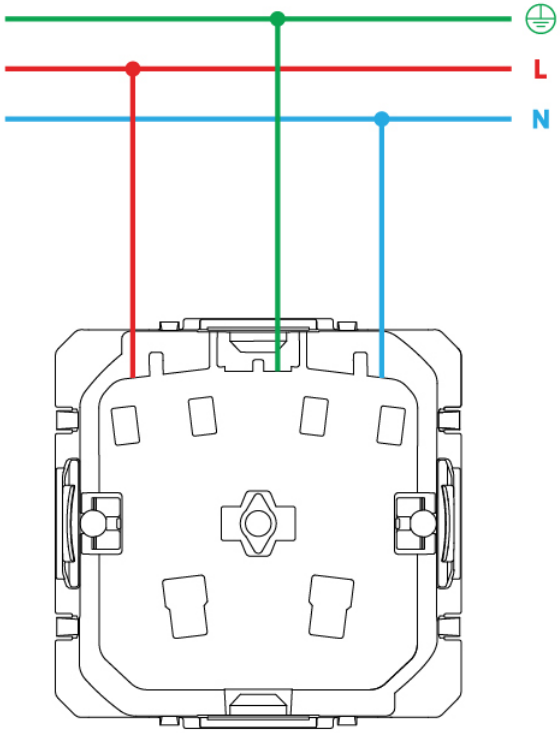
L
N

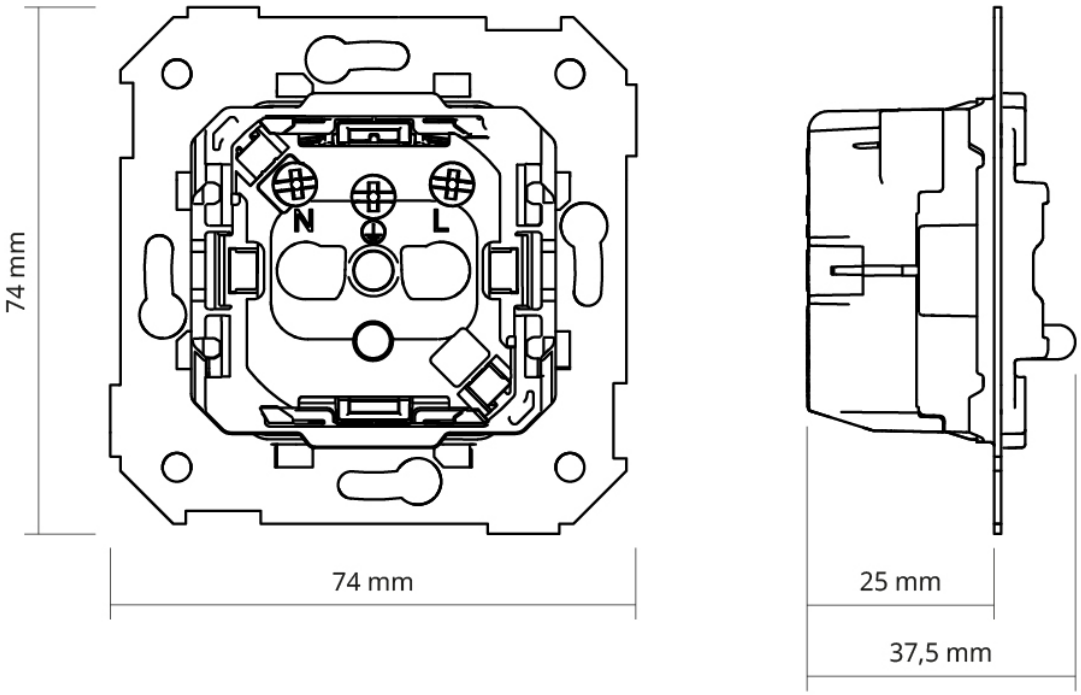
74 mm
N
L
74 mm
25 mm
37,5 mm