USB 2.0 type A connector bronze Simon 270

REF. **20000090-097**

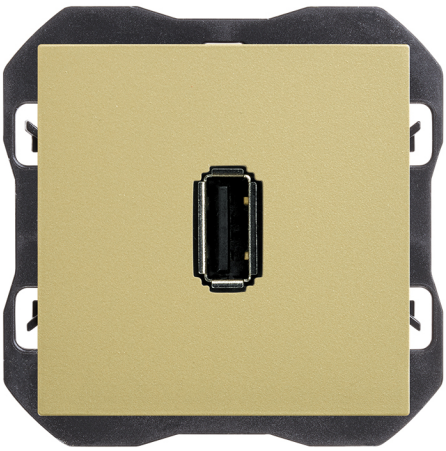

BASIC INFORMATION

DESCRIPTION

USB 2.0 type A connector from the Simon 270 series, for data transmission in residential and commercial installations. A signal amplifier or a self-powered cable is required for longer distances. Made of thermoplastic, it measures 45 x 45 mm. Suitable for flush mounting in a universal back box, in a horizontal position. Protection rating IP20. Operating temperature range: 5 to 45 °C. Storage temperature range: -25 to 50 °C. Clean with a soft cloth lightly dampened with soapy water, avoiding abrasive or chlorine-based cleaners. Up to 9 available finish colours: 090 Glossy White; 190 Matte White; 091 Copper; 093 Aluminium; 094 Champagne; 095 Gold; 096 Titanium; 097 Bronze; 098 Matte Black.

FINISH

Bronze

COMPATIBILITY

Simon 270 frames

ETIM CLASS

EC000018

MATERIAL

Thermoplastic

PACKAGING CONTENTS

USB connector, cover and instruction sheet

REMARKS

A signal amplifier or the use of a self-powered cable is required for greater distances.

simon

TECHNICAL INFORMATION

AVAILABLE MARKET
CE

CABLE SECTION ADMITTED (MM)
From 1,5 to 2,5 mm

CONNECTOR TYPE
USB

NUMBER OF POSSIBLE ELEMENTS
1 element

FORMAT
USB

IP RATING
IP20

MAINTENANCE
Clean with a soft, dry cloth. Do not use abrasive cloths or cleaning products that contain chlorine.

TYPE OF MECHANISM
Insertion

OPERATING TEMPERATURE RANGE (ºC)
5 - 45 ºC

RAL
3033

RECESS DIMENSION (MM)
35

STORAGE TEMPERATURE RANGE (ºC)
-25 - 50 ºC

USB CHARACTERISTICS
v2.0

USB PORT TYPE
A

INSTALLATION AND MAINTENANCE

INSTALLABLE IN FLUSH MOUNT JUNCTION BOX
Universal

INSTALLATION DIRECTION
Horizontal

INSTALLATION TYPE
Suitable for flush mounting

TYPE OF TERMINAL CONNECTION - FUNCTION 1
Screw

REGULATIONS

REGULATIONS
Directive 2011/65/UE RoHS + EN 50581:2012

LOGISTICS INFORMATION

UNITARY EAN CODE
8421053264607

UNITARY PACKAGING HEIGHT
0

UNITARY PACKAGING WIDTH
0

UNITARY PACKAGING LENGTH
0

UNITARY PACKAGING MEASUREMENT UNIT
MMT

UNITARY PACKAGING VOLUME
0

UNITARY PACKAGING VOLUME UNIT
MMQ

UNITARY PACKAGING GROSS WEIGHT
0.048

PRODUCT NET WEIGHT
0.048

UNITARY PACKAGING WEIGHT UNIT
KGM

PACKAGING EAN
8421053264607

UNITS CONTAINED PACKAGING
1

PACKAGING HEIGHT
80

PACKAGING WIDTH
55

PACKAGING LENGTH
55

PACKAGING MEASUREMENT UNIT
MMT

PACKAGING VOLUME
242000

PACKAGING VOLUME UNIT
MMQ

PACKAGING GROSS WEIGHT
0

PACKAGING NET WEIGHT
0.048

PACKAGING WEIGHT UNIT
KGM

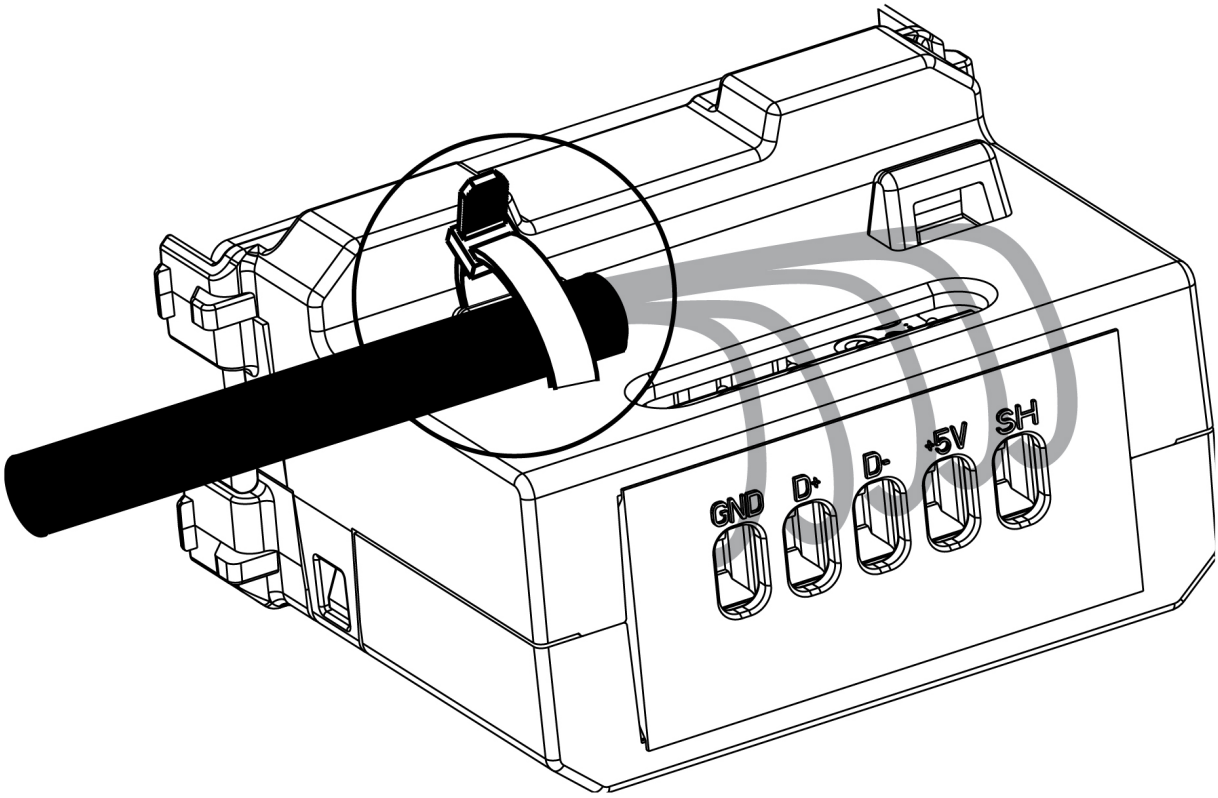

GND - ⏚

D +

D -

R - Derecha / Direita / Droit / Right

+5V - VBUS (5V)
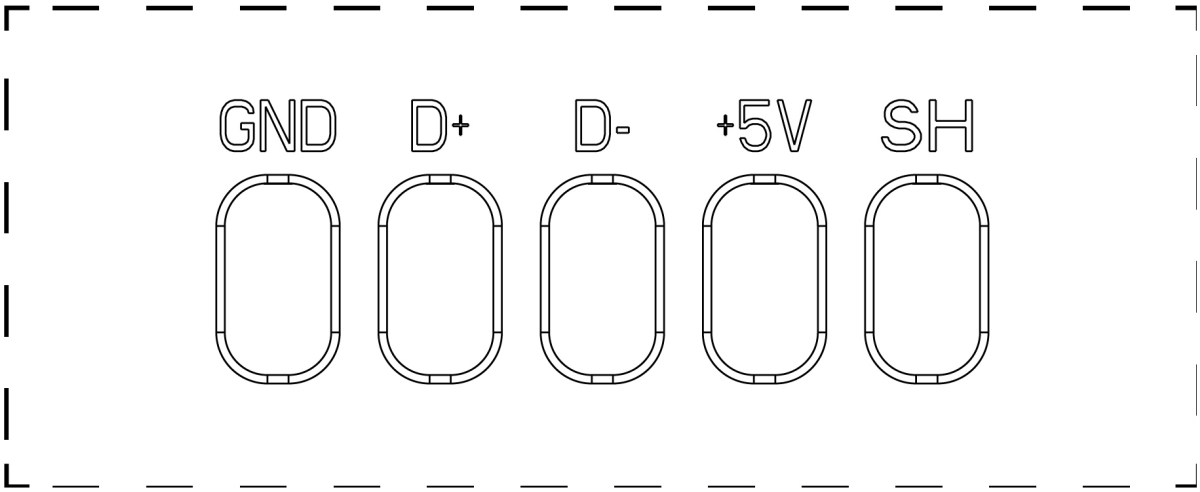
SH - Malla /Shell