# SWITCH WITH SCREW TERMINAL CONNECTION SYSTEM MATT WHITE SIMON 82 CONCEPT

REF. **8200101-090**



## BASIC INFORMATION

**FINISH**
Matt white

**COMPATIBILITY**
Simon 82

**PACKAGING**
Flow pack

**PACKAGING CONTENTS**
Mechanism

**ETIM CLASS**
EC001590

## TECHNICAL INFORMATION

**AVAILABLE MARKET**
CE

**CABLE SECTION ADMITTED (MM)**
2,5 mm

**NUMBER OF POSSIBLE ELEMENTS**
1 item

**FORMAT**
Rocker, mechanism and frame-holder

**INDICATOR FUNCTION**
No

**CURRENT (A)**
10 AX

**IP RATING**
IP20

**TYPE OF MECHANISM**
Rocker switch

**MONOBLOCK**
No

**NOMINAL VOLTAGE (V~)**
250 V~

**OPERATING TEMPERATURE RANGE (°C)**
5 - 40 °C

**STORAGE TEMPERATURE RANGE (°C)**
-25 - 50 °C

**VERSION**
Single

## INSTALLATION AND MAINTENANCE

**CLAW**
Not possible

**INSTALLABLE IN FLUSH MOUNT JUNCTION BOX**
Universal

**INSTALLATION TYPE**
Suitable for surface or recessed mount

**TYPE OF TERMINAL CONNECTION - FUNCTION 1**
Fast

## REGULATIONS

**WARRANTY**
3 years

**REGULATIONS**
Directive 2011/65/UE RoHS + EN 50581:2012 + IEC 60884-1 Ed 3.2

## LOGISTICS INFORMATION

UNITARY EAN CODE
8421053279670

UNITARY PACKAGING HEIGHT
0

UNITARY PACKAGING WIDTH
0

UNITARY PACKAGING LENGTH
0

UNITARY PACKAGING MEASUREMENT UNIT
MMT

UNITARY PACKAGING VOLUME
0

UNITARY PACKAGING VOLUME UNIT
MMQ

UNITARY PACKAGING GROSS WEIGHT
0.075

PRODUCT NET WEIGHT
0.075

UNITARY PACKAGING WEIGHT UNIT
KGM

PACKAGING EAN
8421053228081

UNITS CONTAINED PACKAGING
10

PACKAGING HEIGHT
83

PACKAGING WIDTH
165

PACKAGING LENGTH
221

PACKAGING MEASUREMENT UNIT
MMT

PACKAGING VOLUME
3026595

PACKAGING VOLUME UNIT
MMQ

PACKAGING GROSS WEIGHT
0.745

PACKAGING NET WEIGHT
0.75

PACKAGING WEIGHT UNIT
KGM

# MECANISMOS SIMON 31, 75, 77, 82 Y 88

## Mecanismos básicos / Basic switches

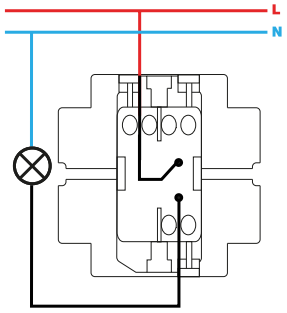


Interruptor unipolar / Single-pole switch
XXXX101-XXX

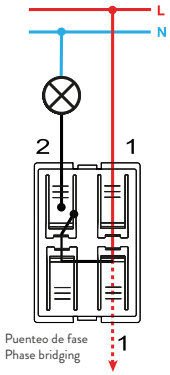


Interruptor unipolar / Single-pole switch
7700101-039

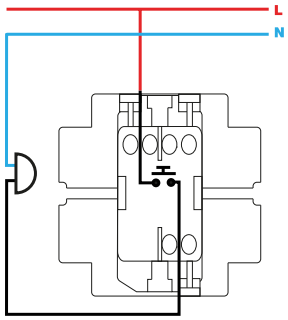


Pulsador / Push button switch
XXXX150-XXX

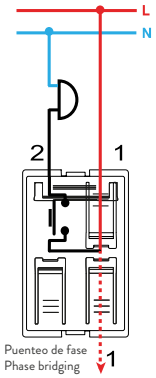


Pulsador / Push button switch
7700150-039

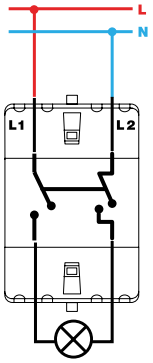


Interruptor bipolar / Double pole switch
XXXX133-XXX

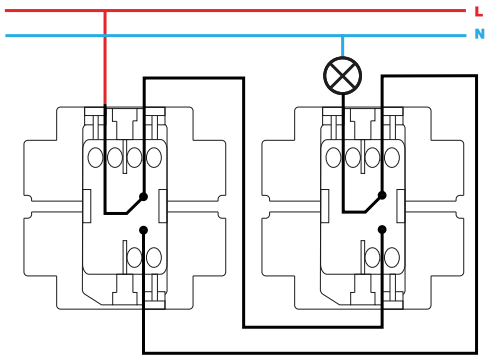


Conmutador / 2-way switch
XXXX201-XXX

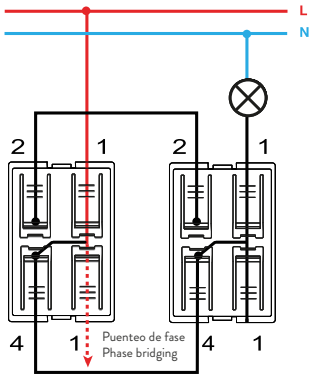


Conmutador / 2-way switch
7700201-039

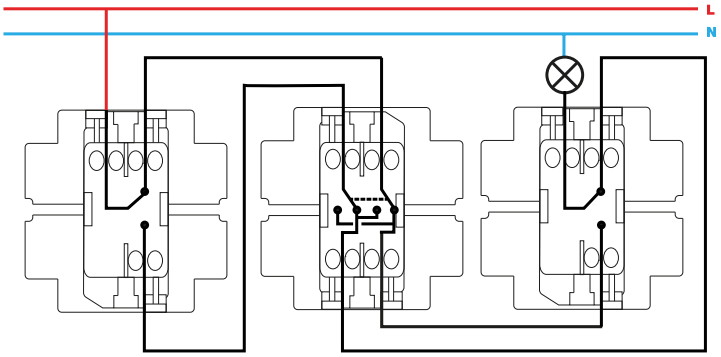


Conmutador cruce / Intermediate switch
XXXX251-XXX

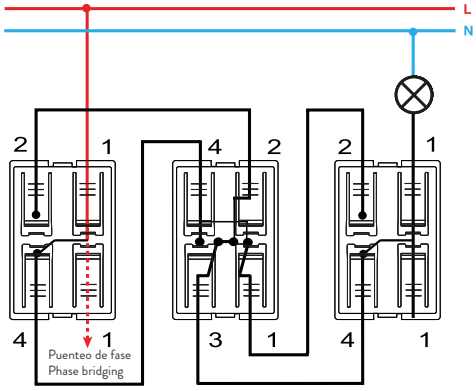


Conmutador cruce / Intermediate switch
7700251-039

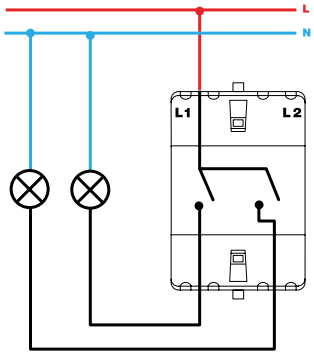


Grupo 2 interruptores / 2 switches group
XXXX398-XXX

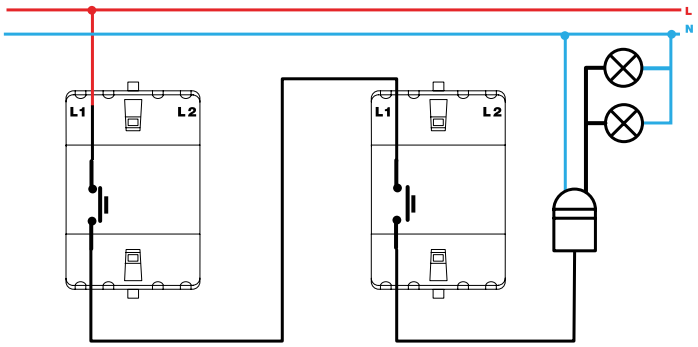


Pulsador desconexión / Push button desconexion switch
XXXX152-XXX

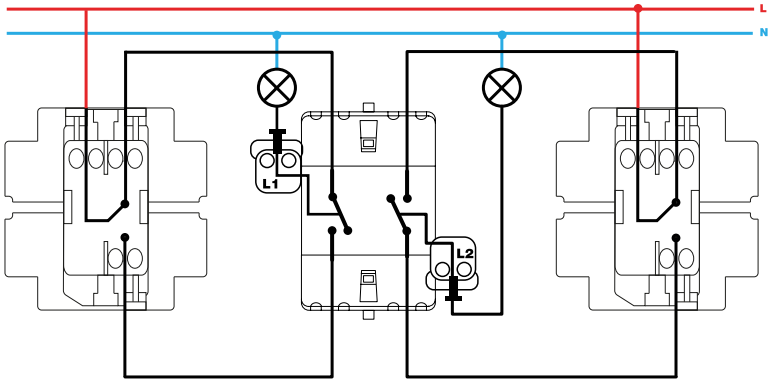


Grupo dos conmutadores / 2-way switches group
XXXX397-XXX

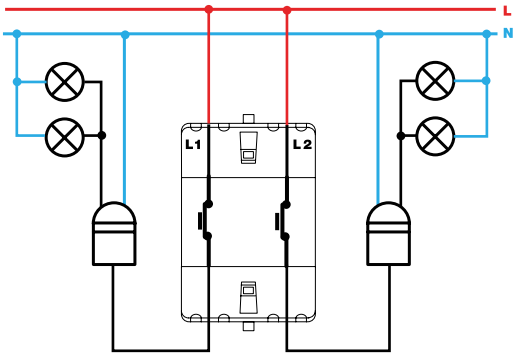


Grupo de pulsadores desconexión / Push button switch desconexion group XXXX395-XXX

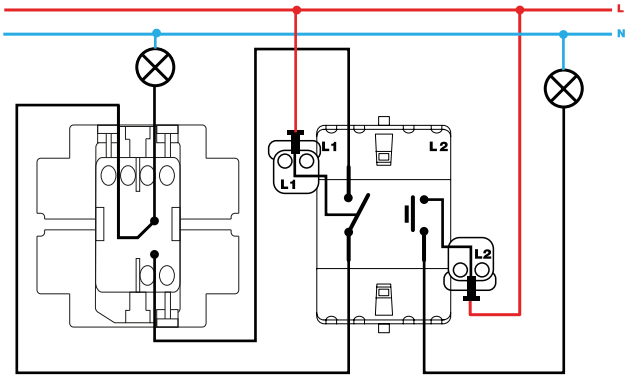


Grupo conmutador y pulsador / 2-way and push button switch group
XXXX301-XXX

## Mecanismos con piloto / Pilot switches

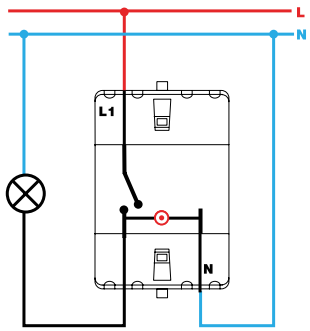


Interruptor unipolar / Single-pole switch
XXXX102-XXX

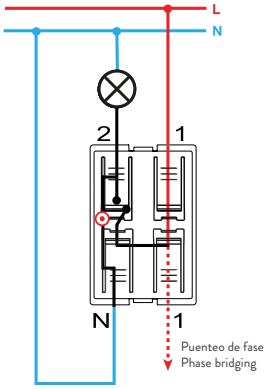


Interruptor con piloto / Push button pilot switch
7700112-039

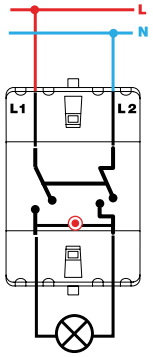


Interruptor bipolar / Double pole switch
XXXX134-XXX

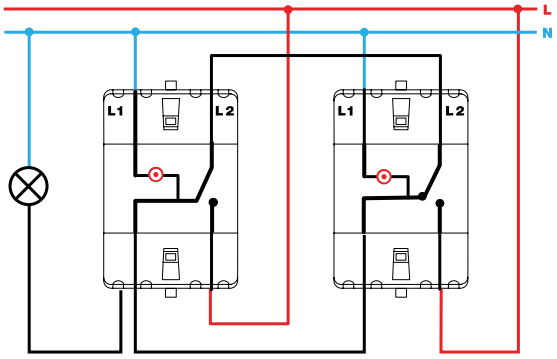


Conmutador / 2-way switch
XXXX202-XXX

## Mecanismos con luminoso / Switches with light

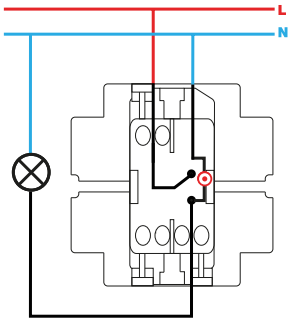


Interruptor unipolar con luminoso / Single-pole switch with light
XXXX104-XXX

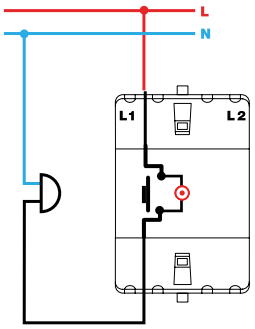


Pulsador con luminoso / Push button switch with light
XXXX160-XXX

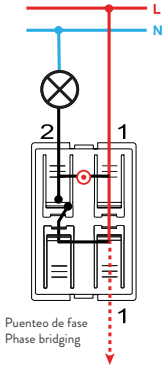


Pulsador con luminoso / Push button switch with light
7700160-039

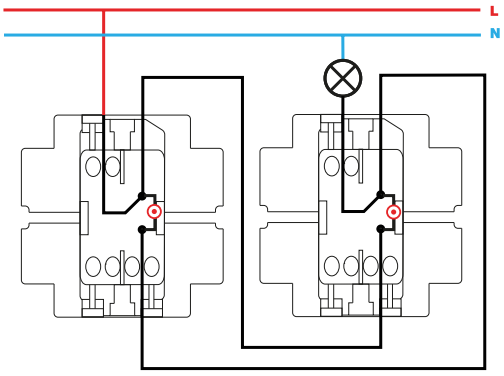


Conmutador con luminoso / 2-way switch with light
XXXX204-XXX

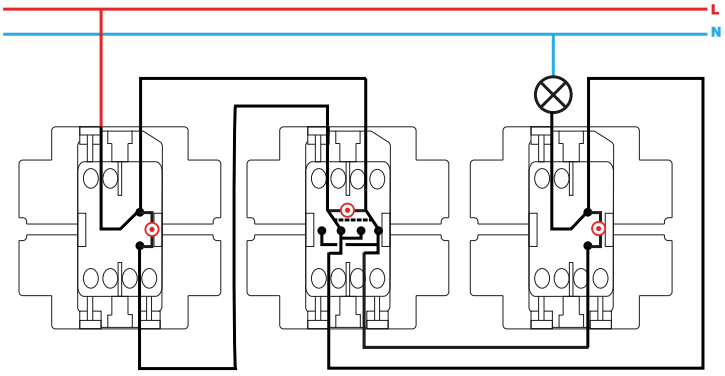


Conmutador cruce con luminoso / Intermediate switch with light
XXXX254-XXX