HDMI 2.0 4K connector + USB 2.0 type A connector matt black Simon 270

REF. **20000095-098**

BASIC INFORMATION

DESCRIPTION

HDMI 2.0 4K connector with USB 2.0 type A connector from the Simon 270 series, combining high-definition audio and video connection with a USB data port in a single mechanism. A signal amplifier is required for longer distances. Made of thermoplastic, it measures 45 x 45 mm. Suitable for flush mounting in a universal back box, in a horizontal position. Protection rating IP20. Operating temperature range: 5 to 45 °C. Storage temperature range: -25 to 50 °C. Clean with a soft cloth lightly dampened with soapy water, avoiding abrasive or chlorine-based cleaners. Up to 9 available finish colours: 090 Glossy White; 190 Matte White; 091 Copper; 093 Aluminium; 094 Champagne; 095 Gold; 096 Titanium; 097 Bronze; 098 Matte Black.

FINISH

Matt black

COMPATIBILITY

Simon 270 frames

ETIM CLASS

EC002906

MATERIAL

Thermoplastic

PACKAGING CONTENTS

HDMI connector + USB connector, cover and instruction sheet

REMARKS

A signal amplifier is required for greater distances. The length of the cable will depend on the type of emission (full HD, 3D...).

simon

TECHNICAL INFORMATION

AVAILABLE MARKET
CE

COMPATIBLE 12V AC/DC
No

COMPATIBLE 230V AC/DC
No

CABLE SECTION ADMITTED (MM)
From 1,5 to 2,5 mm

REVISION
2.0

CONNECTOR TYPE
HDMI + USB

NUMBER OF POSSIBLE ELEMENTS
1 element

FORMAT
HDMI,USB

IP RATING
IP20

MAINTENANCE
Clean with a soft, dry cloth. Do not use abrasive cloths or cleaning products that contain chlorine.

TYPE OF MECHANISM
Insertion

OPERATING TEMPERATURE RANGE (ºC)
5 - 45 ºC

RAL
9005

RECESS DIMENSION (MM)
35

STORAGE TEMPERATURE RANGE (ºC)
-25 - 50 ºC

USB PORT TYPE
A

INSTALLATION AND MAINTENANCE

INSTALLABLE IN FLUSH MOUNT JUNCTION BOX
Universal

INSTALLATION DIRECTION
Horizontal

INSTALLATION TYPE
Suitable for flush mounting

TYPE OF TERMINAL CONNECTION - FUNCTION 1
Feed-through connector, screw

REGULATIONS

REGULATIONS
Directive 2011/65/UE RoHS + EN 50581:2012

LOGISTICS INFORMATION

UNITARY EAN CODE
8421053283943

UNITARY PACKAGING HEIGHT
0

UNITARY PACKAGING WIDTH
0

UNITARY PACKAGING LENGTH
0

UNITARY PACKAGING VOLUME
0

UNITARY PACKAGING GROSS WEIGHT
0.05

PRODUCT NET WEIGHT
0.05

UNITARY PACKAGING WEIGHT UNIT
KGM

PACKAGING EAN
8421053283943

UNITS CONTAINED PACKAGING
1

PACKAGING HEIGHT
80

PACKAGING WIDTH
55

PACKAGING LENGTH
55

PACKAGING MEASUREMENT UNIT
MMT

PACKAGING VOLUME
0.242

PACKAGING VOLUME UNIT
DMQ

PACKAGING GROSS WEIGHT
0

PACKAGING NET WEIGHT
0.05

PACKAGING WEIGHT UNIT
KGM

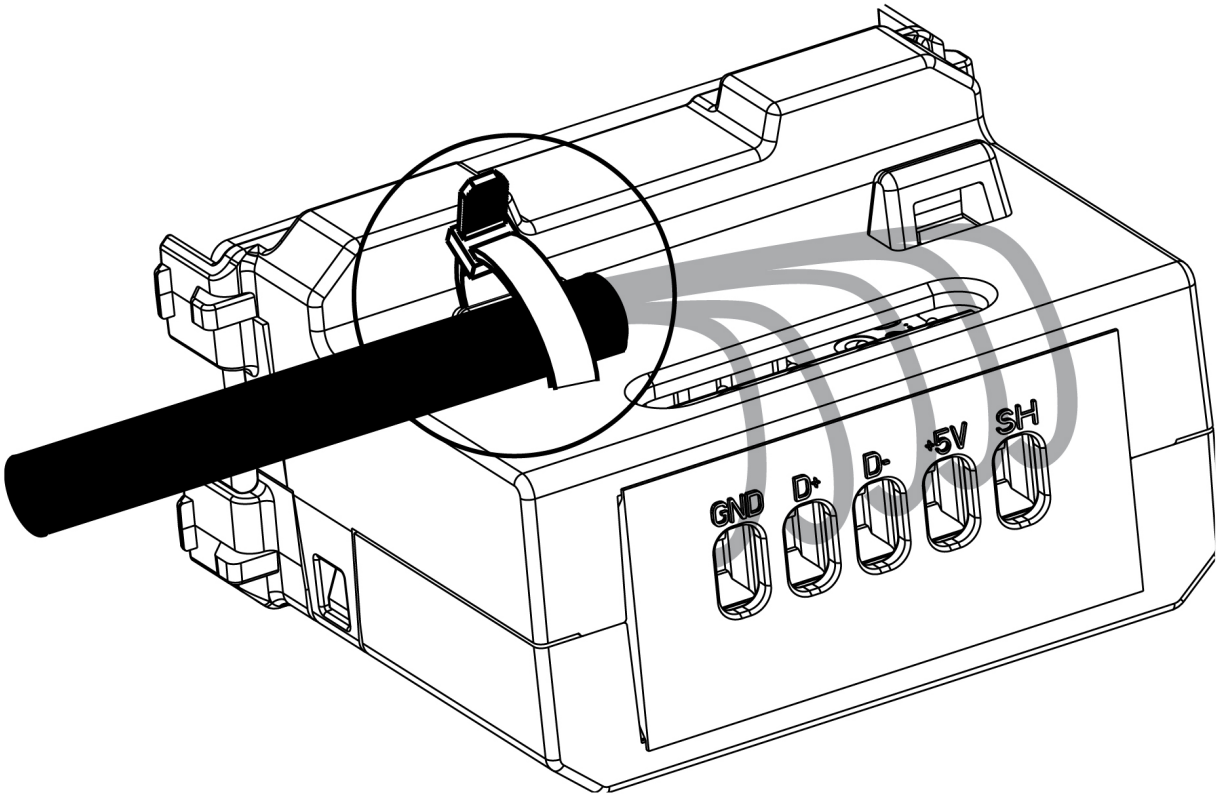

GND - ⏚

D +

D -

R - Derecha / Direita / Droit / Right

+5V - VBUS (5V)

SH - Malla /Shell

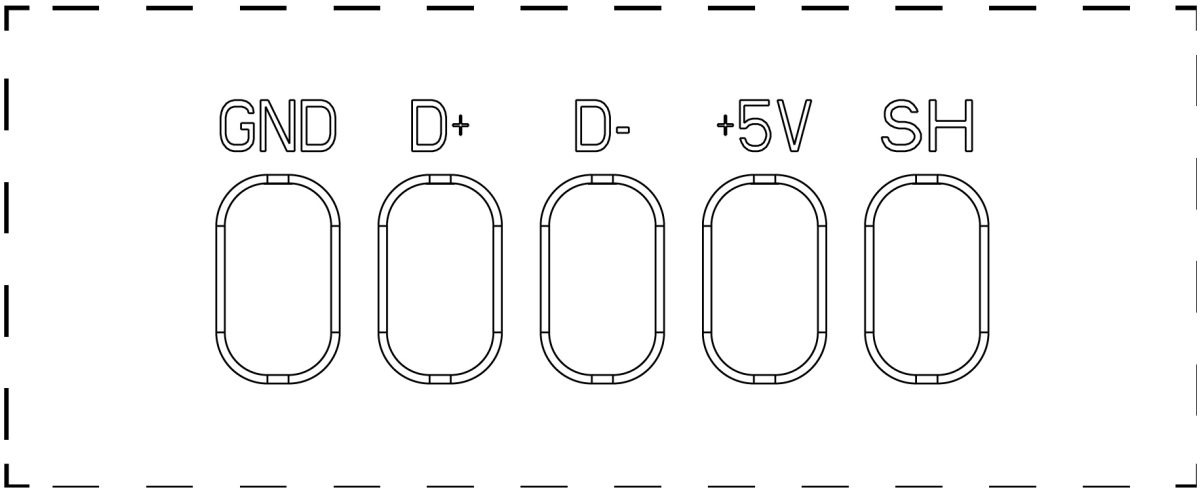

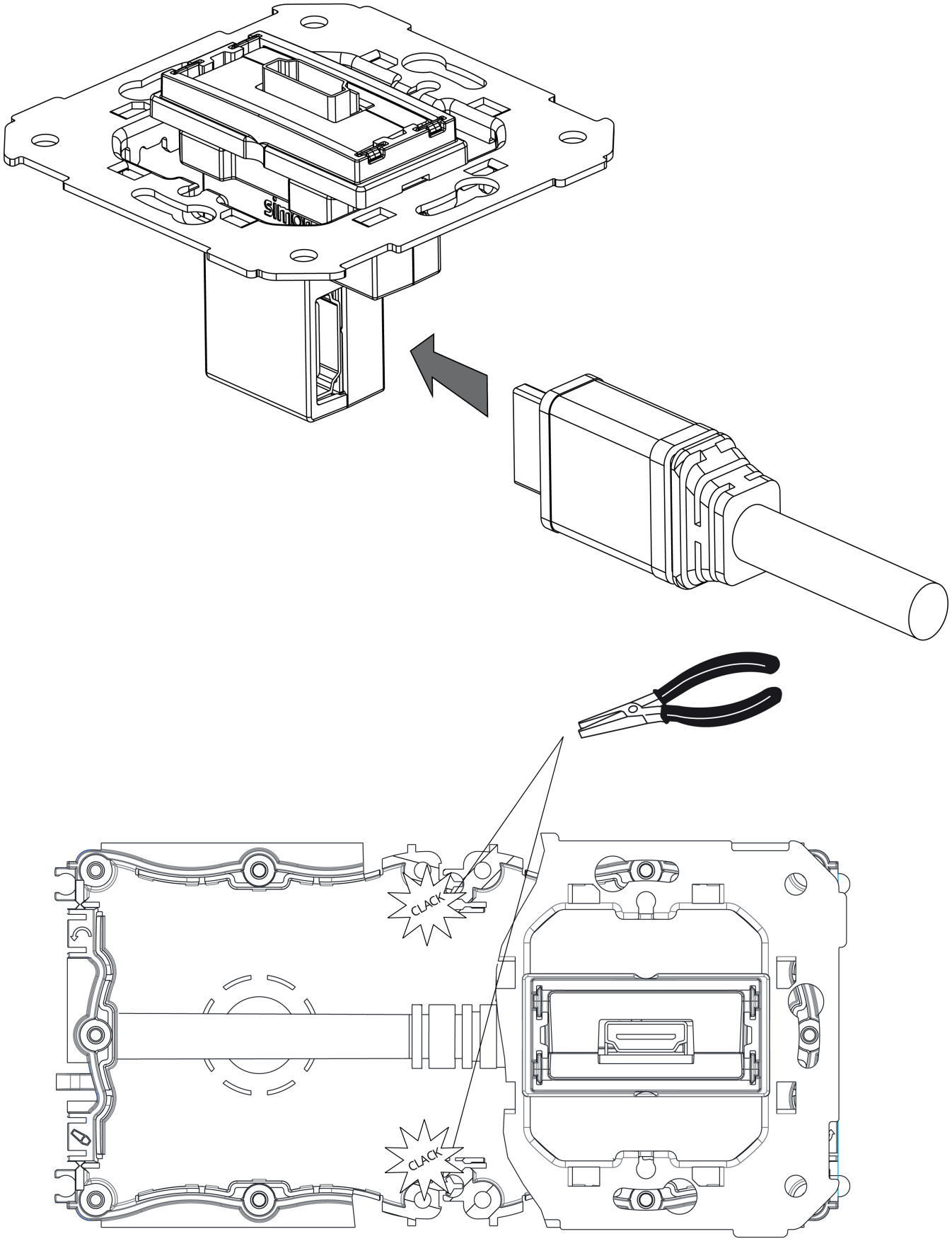
CLACK
CLACK