simon

IR presence detector 127V~ graphite Simon 26

REF. **2600342-038**

BASIC INFORMATION

FINISH
Graphite

TECHNICAL INFORMATION

CABLE SECTION ADMITTED (MM)
3,3 mm

CURRENT (A)
6 A

MAINTENANCE
Clean with a soft, dry cloth. Do not use abrasive cloths or cleaning products that contain chlorine.

NOMINAL VOLTAGE (V~)
127/220 V~

POWER SUPPLY (V~)
127/220 V~

simon

INSTALLATION AND MAINTENANCE

CABLE STRIPPING NECESSARY (MM)
11

LOGISTICS INFORMATION

UNITARY PACKAGING HEIGHT
22.5

UNITARY PACKAGING WIDTH
51.9

UNITARY PACKAGING LENGTH
50

UNITARY PACKAGING MEASUREMENT UNIT
MMT

UNITARY PACKAGING VOLUME
0.058

UNITARY PACKAGING VOLUME UNIT
DMQ

UNITARY PACKAGING GROSS WEIGHT
60.5

PRODUCT NET WEIGHT
60.5

UNITARY PACKAGING WEIGHT UNIT
GRM

PACKAGING EAN
7506207325074

UNITS CONTAINED PACKAGING
1

PACKAGING HEIGHT
27

PACKAGING WIDTH
58

PACKAGING LENGTH
61

PACKAGING MEASUREMENT UNIT
MMT

PACKAGING VOLUME
0.096

PACKAGING VOLUME UNIT
DMQ

PACKAGING GROSS WEIGHT
0.06

PACKAGING NET WEIGHT
60.5

PACKAGING WEIGHT UNIT
KGM

VISTA FRONTAL E ISOMÉTRICA DEL PRODUCTO

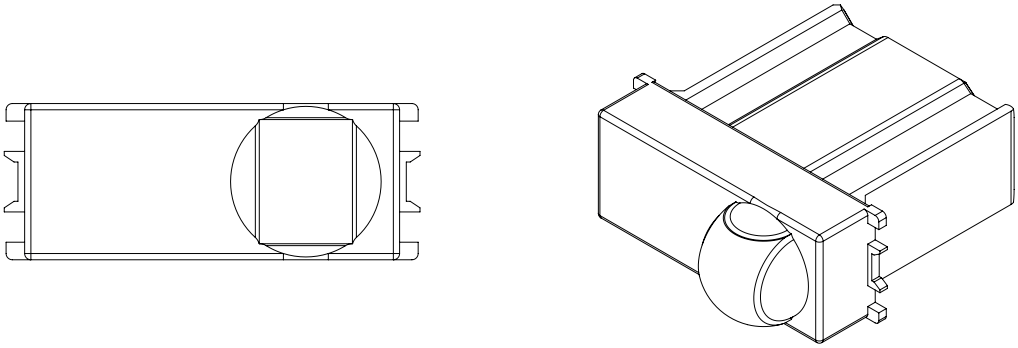

DIAGRAMA DE MONTAJE

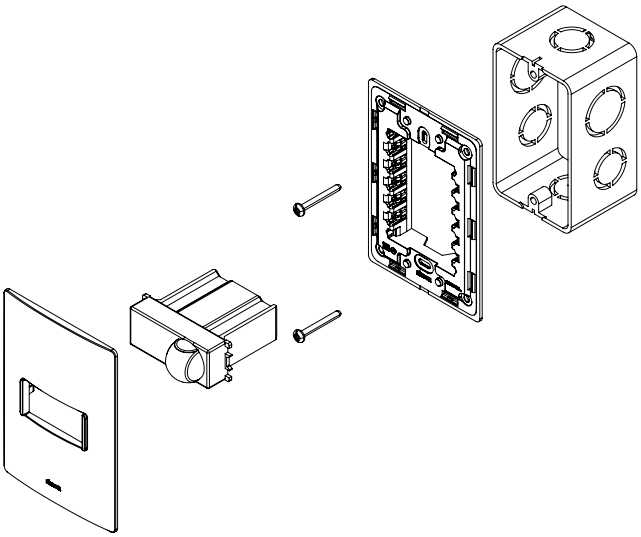

*Placa y chasis NO incluidos

DIAGRAMA DE CONEXIÓN

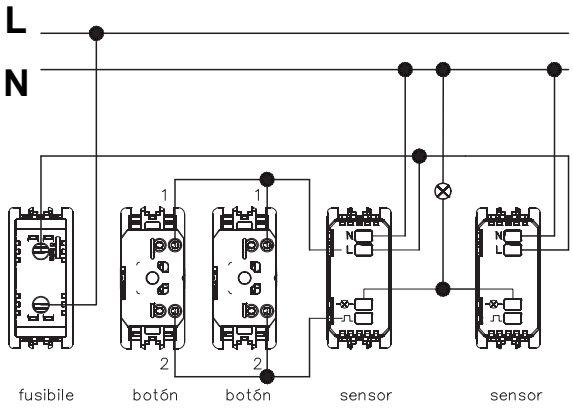

VISTA FRONTAL E ISOMÉTRICA DEL PRODUCTO

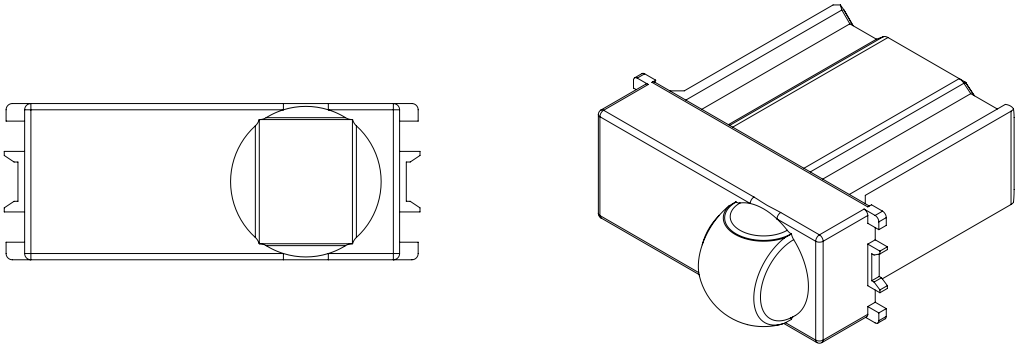

DIAGRAMA DE MONTAJE

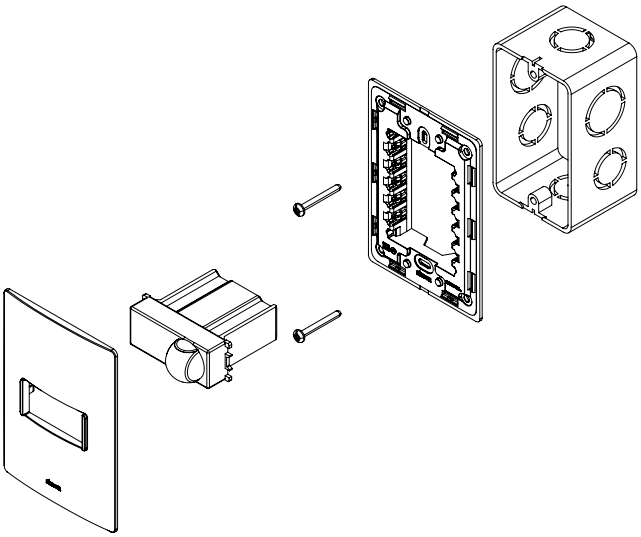

*Placa y chasis NO incluidos
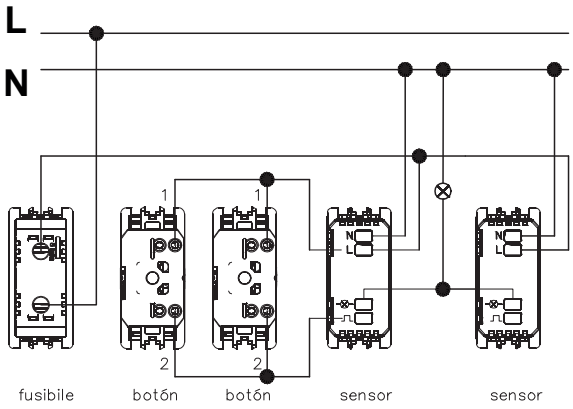
DIAGRAMA DE CONEXIÓN