Cover for TV+RJ45 (mixed socket) matte white Simon 360

REF. **36000072-190**

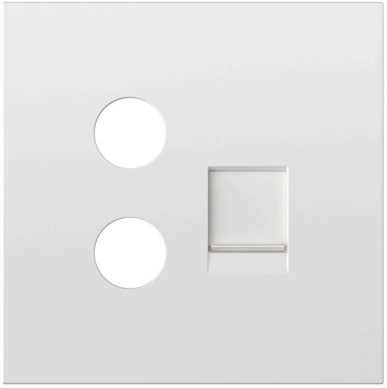

BASIC INFORMATION

DESCRIPTION

Cover for TV+RJ45 (mixed socket) in white finish from the Simon 360 series. The matte finish, besides being trendy and integrating into any environment, prevents light reflections and reduces maintenance by minimizing stains and fingerprints. Soft and quality touch that provides a sense of sophisticated product in all colors of the series. Urea is the main material and has high resistance and durability, ensuring a long useful life. Cover designed for installation in Simon 75 mechanisms.

FINISH

Matt white

MATERIAL

Thermoplastic,Steel

ETIM CLASS

EC000018

SYMBOL

TV-R

COMPATIBILITY

Molduras Simon 360

REMARKS

Available in 3 matte finishes s360. Frame available in the same color as the selected interior to create a single-color set or the possibility of a bicolor set. For cleaning, it is recommended to use a cloth slightly dampened with soapy water, avoiding the use of abrasive cloths or cleaners containing chlorine, to prevent damage to the product's surface.

TECHNICAL INFORMATION

FORMAT
R/TV,RJ45,SAT

INDICATOR FUNCTION
No

IP RATING
IP20

MAINTENANCE
Clean with a soft, dry cloth. Do not use abrasive cloths or cleaning products that contain chlorine.

INSTALLATION AND MAINTENANCE

REMOVAL OF COVER
Only with tool

INSTALLATION DIRECTION
Horizontal, Vertical

LOGISTICS INFORMATION

UNITARY EAN CODE
8421053440827

UNITARY PACKAGING HEIGHT
0

UNITARY PACKAGING WIDTH
0

UNITARY PACKAGING LENGTH
0

UNITARY PACKAGING MEASUREMENT UNIT
MMT

UNITARY PACKAGING VOLUME
0

UNITARY PACKAGING VOLUME UNIT
MMQ

UNITARY PACKAGING GROSS WEIGHT
0.021

PRODUCT NET WEIGHT
0.016

UNITARY PACKAGING WEIGHT UNIT
KGM

PACKAGING EAN
8421053440834

UNITS CONTAINED PACKAGING
10

PACKAGING HEIGHT
82

PACKAGING WIDTH
83

PACKAGING LENGTH
223

PACKAGING MEASUREMENT UNIT
MMT

PACKAGING VOLUME
1517738

PACKAGING VOLUME UNIT
MMQ

PACKAGING GROSS WEIGHT
0.247

PACKAGING NET WEIGHT
0.16

PACKAGING WEIGHT UNIT
KGM

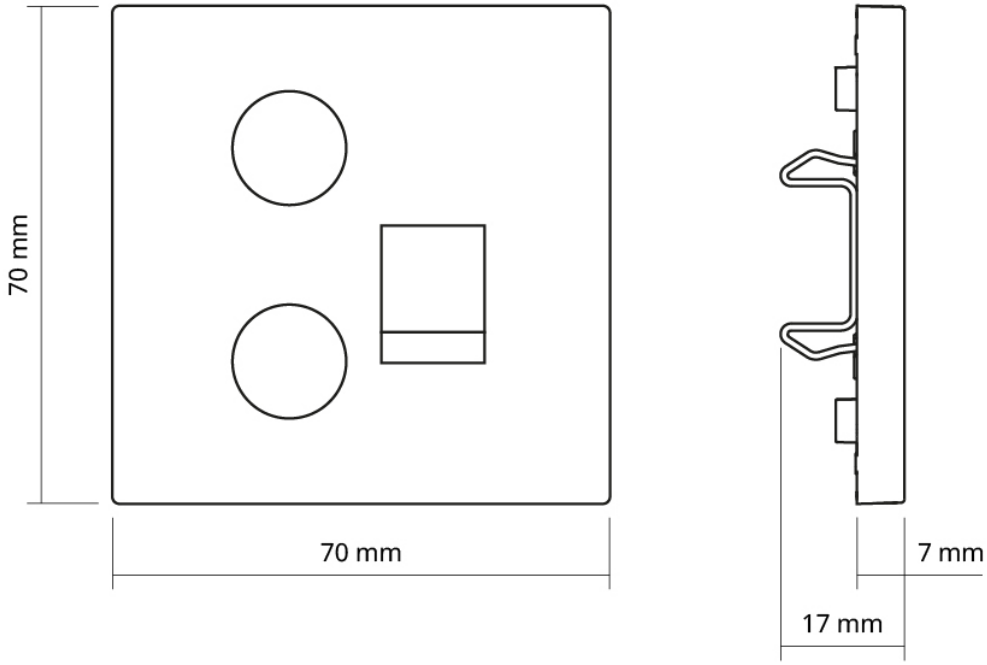
70 mm
70 mm
7 mm
17 mm