Cylinder lock and key for surface or flush-mount wall box with hinged cover Simon 500 Cima

REF. **51040900-033**



BASIC INFORMATION

DESCRIPTION

Cylinder lock and key for surface-mounted wall box with hinged cover or recess. It has finished in aluminium and is made of metal in compliance with the regulation, the piece is suitable for installation in enclosures wall-mounted. The optimum temperature range of installation is placed between -5 and 60 °. The article has a depth of 19 mm. This reference is not included in the boxes and frames wall-mounted of plastic with hinged cover. In case you want to restrict access to connections, must be ordered. As for its maintenance, the ideal is to clean the lock cylinder with a soft, dry cloth and avoid abrasive cleaners containing chlorine. The product is included in the Simon 500 Cima series, a collection that focuses on the workplace solutions for work spaces. In this we find all kinds of articles such as kits, voice and data plates, recessed and fixed wall-mounted and floor, etc.

FINISH

Aluminium

COMPATIBILITY

Wall enclosures Simon 500 Cima

ETIM CLASS

EC000743

MATERIAL

Metal

PACKAGING CONTENTS

Cylinder lock, set of 2 keys and installation manual

REMARKS

This article is not included in the plastic wall boxes and frames with hinged cover. Must be ordered if you want to restrict access to the connections.

TECHNICAL INFORMATION

AVAILABLE MARKET

CE

KIT AVAILABILITY

No

TEMPERATURE RANGE DURING INSTALLATION (°C)

-5 to 60 °C

MAX TEMP DURING CONSTRUCTION WORK (°C)

+60 °C

MAINTENANCE

Clean with a soft, dry cloth. Do not use abrasive cloths or cleaning products that contain chlorine.

VERSION

6 and 8 elements

IP RATING

IP20

INSTALLATION AND MAINTENANCE

REMOVAL OF COVER
Only with tool

TYPE OF FASTENING
By direct snap-fit in the selected enclosure with hinged cover. You need to remove the cap in the enclosure where the cylinder lock will be placed (no tools needed for fastening))

INSTALLATION DIRECTION
Vertical, corresponding with the direction of the mechanisms

INSTALLATION TYPE
Suitable for installing in surface or flush-mount wall enclosures with hinged cover

REGULATIONS

REGULATIONS
Directive 2014/35/UE LVD + EN 60670-1:2005

LOGISTICS INFORMATION

UNITARY PACKAGING HEIGHT
0

UNITARY PACKAGING WIDTH
0

UNITARY PACKAGING LENGTH
0

UNITARY PACKAGING VOLUME
0

UNITARY PACKAGING GROSS WEIGHT
0.04

PRODUCT NET WEIGHT
0.04

UNITARY PACKAGING WEIGHT UNIT
KGM

PACKAGING EAN
8421053101995

UNITS CONTAINED PACKAGING
5

PACKAGING HEIGHT
57

PACKAGING WIDTH
76

PACKAGING LENGTH
76

PACKAGING MEASUREMENT UNIT
MMT

PACKAGING VOLUME
0.329

PACKAGING VOLUME UNIT
DMQ

PACKAGING GROSS WEIGHT
0

PACKAGING NET WEIGHT
0.2

PACKAGING WEIGHT UNIT
KGM

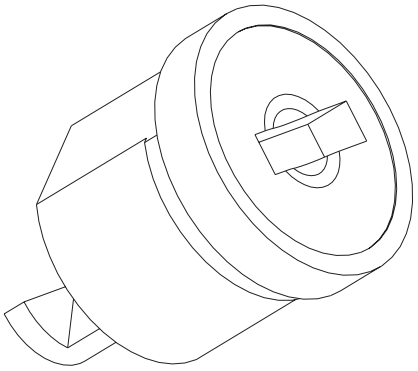

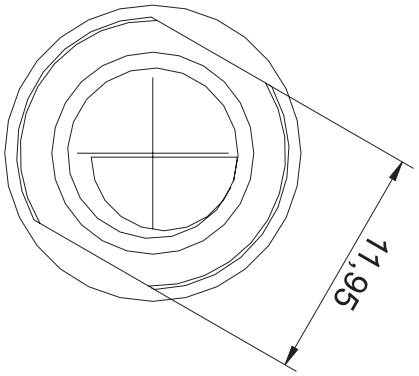
11,95

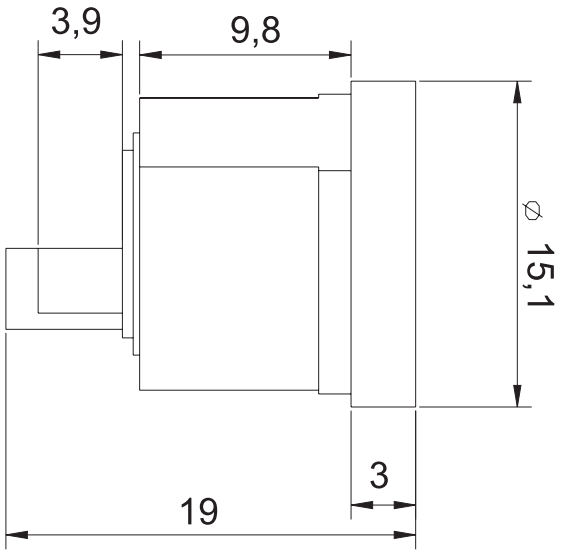
3,9
9,8
⌀ 15,1
3
19

