Simon 100 modular R / TV + SAT signal socket

REF. **10000466-039**

BASIC INFORMATION

PACKAGING CONTENTS

R / TV + SAT socket and instruction sheet

ETIM CLASS

EC000439

TECHNICAL INFORMATION

AVAILABLE MARKET
CE

CONNECTOR TYPE
R-TV+SAT

NUMBER OF POSSIBLE ELEMENTS
Half element

FORMAT
R/TV,SAT

IP RATING
IP20

TYPE OF MECHANISM
Insertion

OPERATING TEMPERATURE RANGE (ºC)
5 - 40 ºC

STORAGE TEMPERATURE RANGE (ºC)
-25 - 50 ºC

VERSION
Unique

INSTALLATION AND MAINTENANCE

CLAW

INSTALLABLE IN FLUSH MOUNT JUNCTION BOX
universal

INSTALLATION DIRECTION
Horizontal, Vertical

INSTALLATION TYPE
Suitable for flush mounting

TYPE OF TERMINAL CONNECTION - FUNCTION 1
Screw

REGULATIONS

REGULATIONS
Directive 2014/30/UE EMC + Directive 2011/65/UE RoHS + EN 50083-2:2012 + EN 50581:2012

LOGISTICS INFORMATION

UNITARY PACKAGING HEIGHT
0

UNITARY PACKAGING WIDTH
0

UNITARY PACKAGING LENGTH
0

UNITARY PACKAGING VOLUME
0

UNITARY PACKAGING GROSS WEIGHT
0.054

PRODUCT NET WEIGHT
0.054

UNITARY PACKAGING WEIGHT UNIT
KGM

PACKAGING EAN
8421053145760

UNITS CONTAINED PACKAGING
5

PACKAGING HEIGHT
40

PACKAGING WIDTH
70

PACKAGING LENGTH
195

PACKAGING MEASUREMENT UNIT
MMT

PACKAGING VOLUME
546000

PACKAGING VOLUME UNIT
MMQ

PACKAGING GROSS WEIGHT
0.27

PACKAGING NET WEIGHT
0.27

PACKAGING WEIGHT UNIT
KGM

INTERMEDIA
10000467-039

FINAL
10000468-039

UNICA
10000466-039

En Serie/Cascada

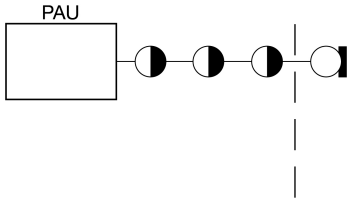

En Estrella

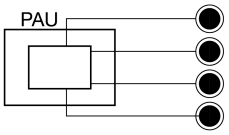

1

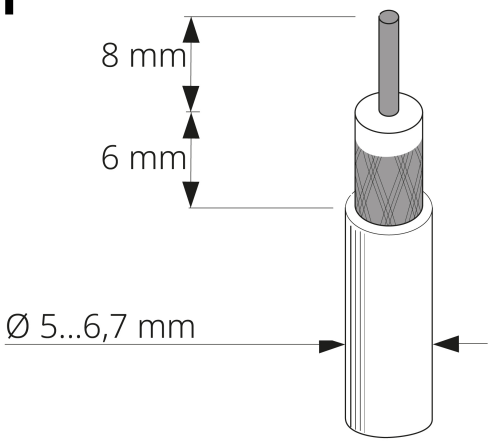

2

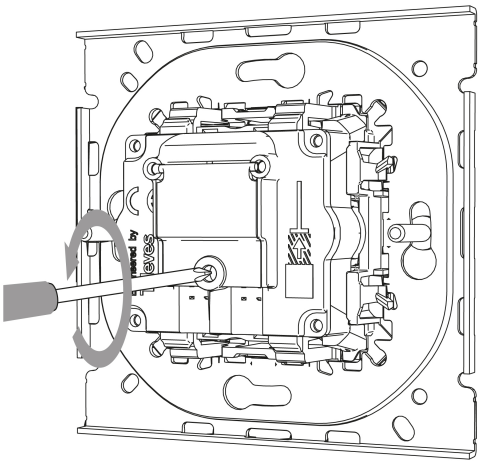

3

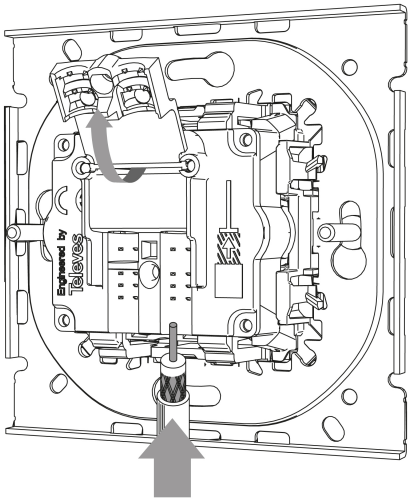

4

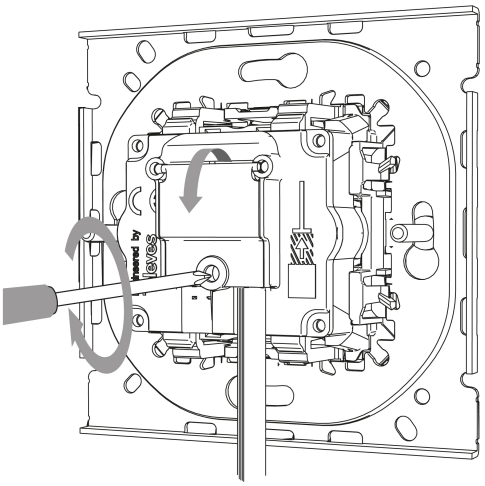

Para información más detallada consultar la hoja de instrucciones
For more detailed information check the instruction sheet