Alignment frame for 2 elements Simon 360

REF. **36000920-039**

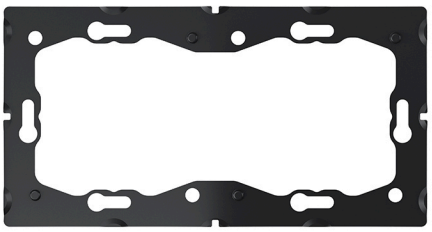

BASIC INFORMATION

DESCRIPTION

Aligner for 2 elements of the Simon 360 series. The solution for an installation with optimal results, compatible with the S75 platform. Provides visual continuity, uniformity in the openings, and flatness on the wall, offering a clean and high-quality visual installation. Ensures the correct functioning of the push-button system, which is essential in multiple installations or with Clean Schuko. It is placed on the wall, supported by the screws of the boxes, before the mechanisms.

MATERIAL

Steel

COMPATIBILITY

Tampas Simon 360

ETIM CLASS

EC002649

REMARKS

Essential on both platforms, pivoting and push button to ensure optimal installation.

simon

TECHNICAL INFORMATION

IP RATING
IP20

INSTALLATION AND MAINTENANCE

INSTALLATION DIRECTION
Horizontal, Vertical

LOGISTICS INFORMATION

UNITARY EAN CODE
8421053438008

UNITARY PACKAGING HEIGHT
0

UNITARY PACKAGING WIDTH
0

UNITARY PACKAGING LENGTH
0

UNITARY PACKAGING MEASUREMENT UNIT
MMT

UNITARY PACKAGING VOLUME
0

UNITARY PACKAGING VOLUME UNIT
MMQ

UNITARY PACKAGING GROSS WEIGHT
0.02

PRODUCT NET WEIGHT
0.02

UNITARY PACKAGING WEIGHT UNIT
KGM

PACKAGING EAN
8421053438015

UNITS CONTAINED PACKAGING
10

PACKAGING HEIGHT
10

PACKAGING WIDTH
80

PACKAGING LENGTH
155

PACKAGING MEASUREMENT UNIT
MMT

PACKAGING VOLUME
124000

PACKAGING VOLUME UNIT
MMQ

PACKAGING GROSS WEIGHT
0.17

PACKAGING NET WEIGHT
0.17

PACKAGING WEIGHT UNIT
KGM

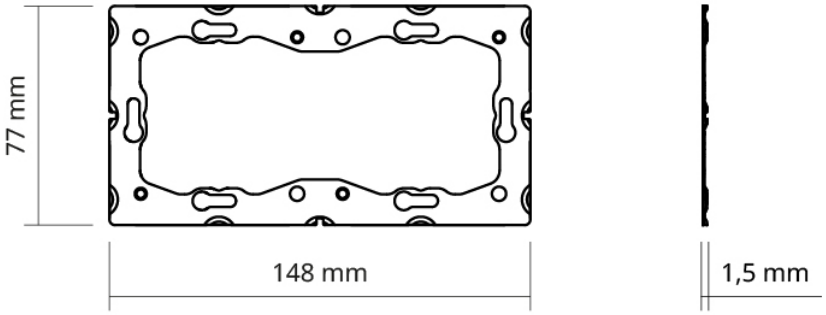
77 mm
148 mm
1,5 mm