Schuko socket LOLA 16A 250 V~ screw terminal IP44 black matte Simon 360

REF. **36102432-098**



BASIC INFORMATION

DESCRIPTION

Schuko socket base LOLA 16A 250 V~ with screw terminal connection system with IP44 protection in black finish from the Simon 360 series. In matte finish. The matte finish avoids light reflections and reduces maintenance by diminishing stains and fingerprints. Urea is the main material and features high resistance and durability, ensuring a prolonged lifespan.

FINISH	MATERIAL	ETIM CLASS
Matt black	Steel,Thermostable	EC000125

TECHNICAL INFORMATION

AVAILABLE MARKET
CE

CABLE SECTION ADMITTED (MM)
1.5...2.5

FREQUENCY
50 - 60 Hz

INDICATOR FUNCTION
Yes

CURRENT (A)
16 A

IP RATING
IP44

LINKABLE
Yes

MAINTENANCE
Clean with a soft, dry cloth. Do not use abrasive cloths or cleaning products that contain chlorine.

OPERATING TEMPERATURE RANGE (°C)
0...+35

POWER SUPPLY (V~)
127/250 V~

RAL
9005

RECESS DIMENSION (MM)
40

STORAGE TEMPERATURE RANGE (°C)
-25...+50

VOLTAGE (V~)
230 V~

INSTALLATION AND MAINTENANCE

CABLE STRIPPING NECESSARY (MM)
10

CLAW
Simon 27

REMOVAL OF COVER
Only with tool

TYPE OF FASTENING
Screw

INSTALLATION DIRECTION
Horizontal

TYPE OF TERMINAL CONNECTION - FUNCTION 1
Screw

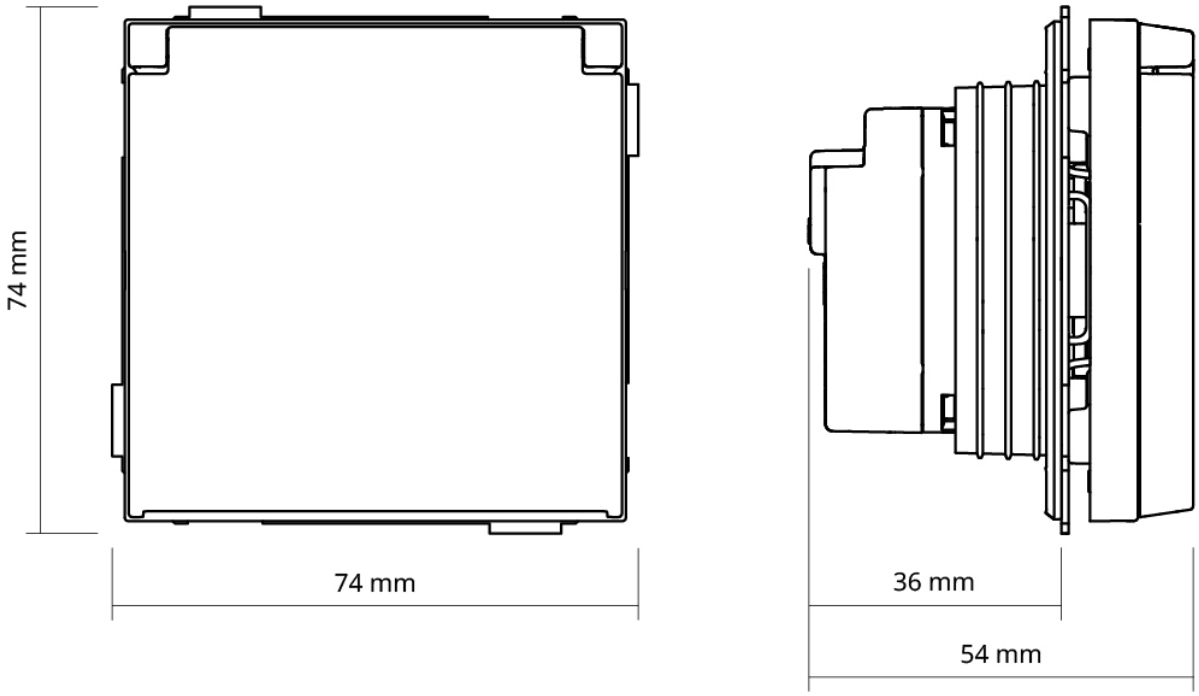
74 mm
74 mm
36 mm
54 mm

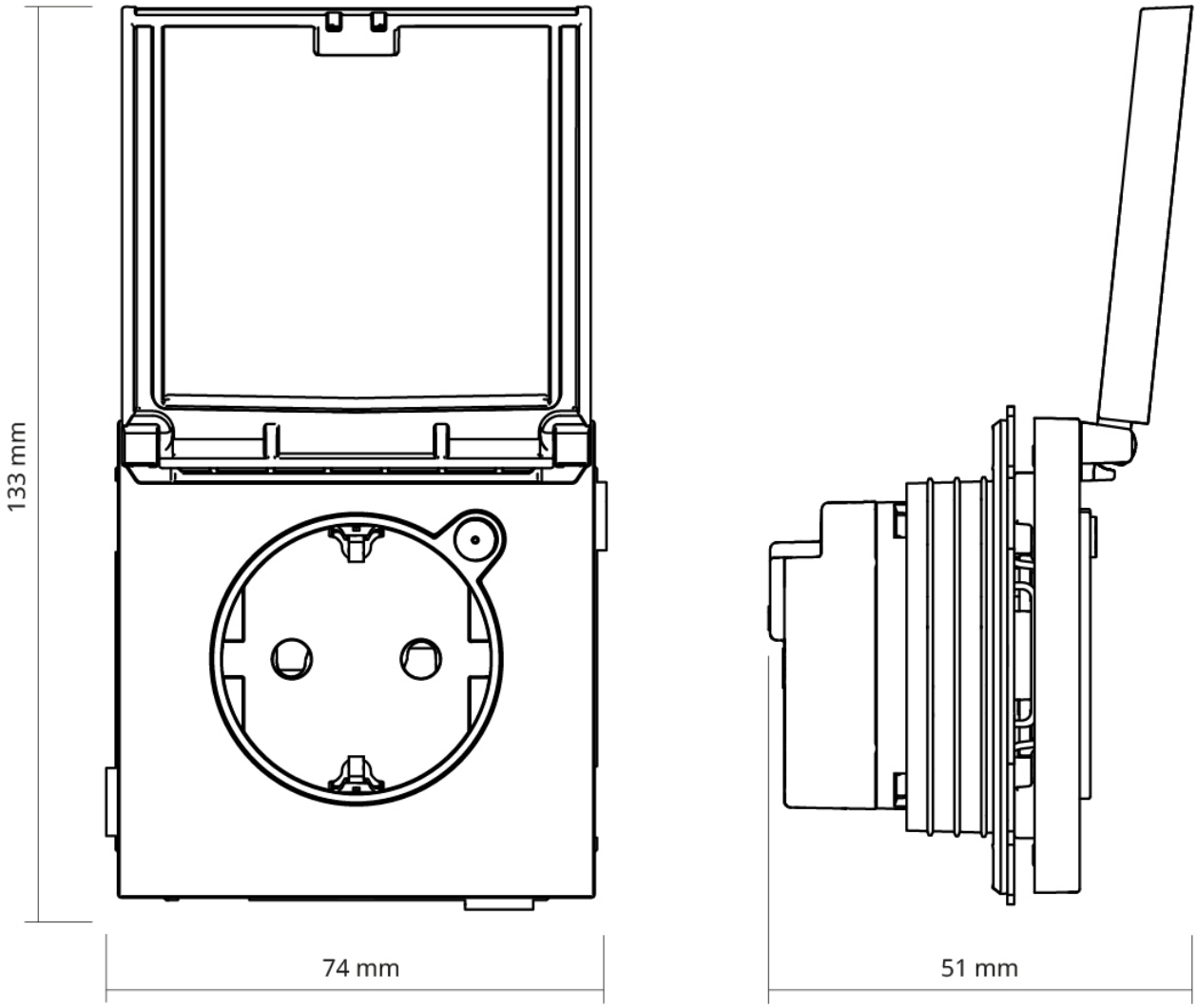
133 mm
74 mm
51 mm