Semi-assembled set of 2 switches 10 AX 250V~ with quick connection system Champagne Simon 82 Concept

REF. **8200397-094**



BASIC INFORMATION

FINISH
Champagne

COMPATIBILITY
Simon 75 Mechanisms

MATERIAL
Various

ETIM CLASS
EC001590

TECHNICAL INFORMATION

INDICATOR FUNCTION
No

CURRENT (A)
10 AX

IP RATING
IP20

INSTALLATION AND MAINTENANCE

TYPE OF TERMINAL
CONNECTION - FUNCTION 1
Quick connector

LOGISTICS INFORMATION

UNITARY PACKAGING HEIGHT
0

UNITARY PACKAGING WIDTH
0

UNITARY PACKAGING LENGTH
0

UNITARY PACKAGING VOLUME
0

UNITARY PACKAGING GROSS WEIGHT
0.083

PRODUCT NET WEIGHT
0.083

UNITARY PACKAGING WEIGHT UNIT
KGM

PACKAGING EAN
8421053306864

UNITS CONTAINED PACKAGING
5

PACKAGING HEIGHT
82

PACKAGING WIDTH
83

PACKAGING LENGTH
223

PACKAGING MEASUREMENT UNIT
MMT

PACKAGING VOLUME
1517738

PACKAGING VOLUME UNIT
MMQ

PACKAGING GROSS WEIGHT
0.415

PACKAGING NET WEIGHT
0.415

PACKAGING WEIGHT UNIT
KGM

MECANISMOS SIMON 31, 75, 77, 82 Y 88

Mecanismos básicos / Basic switches

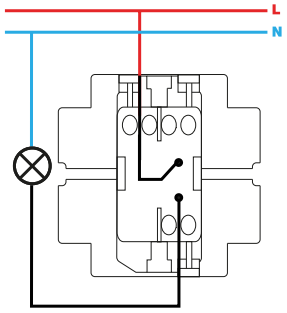

Interruptor unipolar / Single-pole switch
XXXX101-XXX

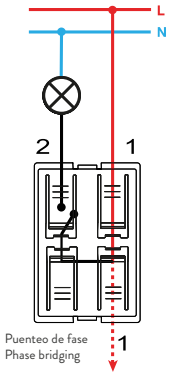

Interruptor unipolar / Single-pole switch
7700101-039

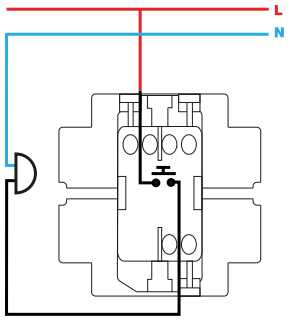

Pulsador / Push button switch
XXXX150-XXX

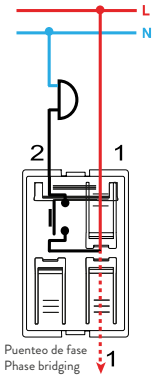

Pulsador / Push button switch
7700150-039

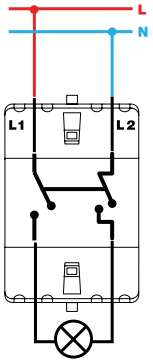

Interruptor bipolar / Double pole switch
XXXX133-XXX

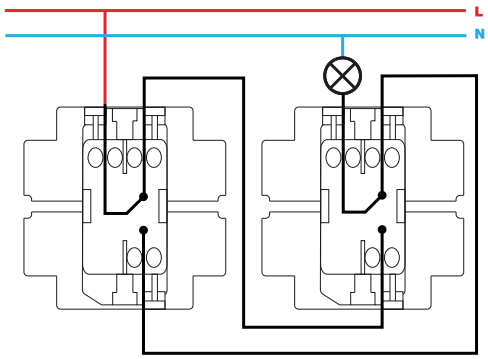

Conmutador / 2-way switch
XXXX201-XXX

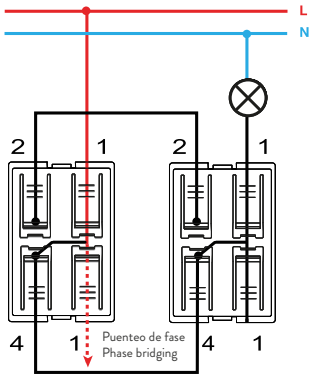

Conmutador / 2-way switch
7700201-039

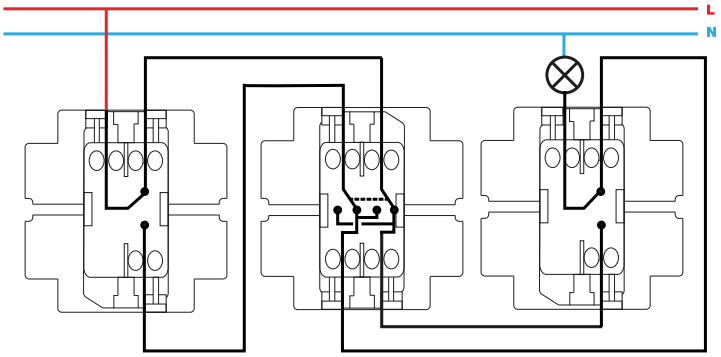

Conmutador cruce / Intermediate switch
XXXX251-XXX

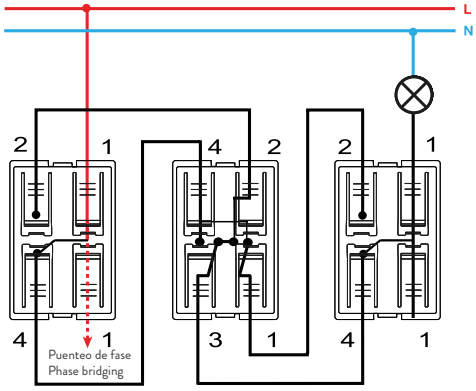

Conmutador cruce / Intermediate switch
7700251-039

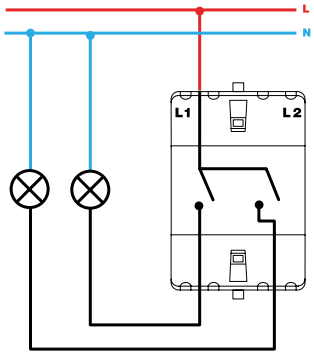

Grupo 2 interruptores / 2 switches group
XXXX398-XXX

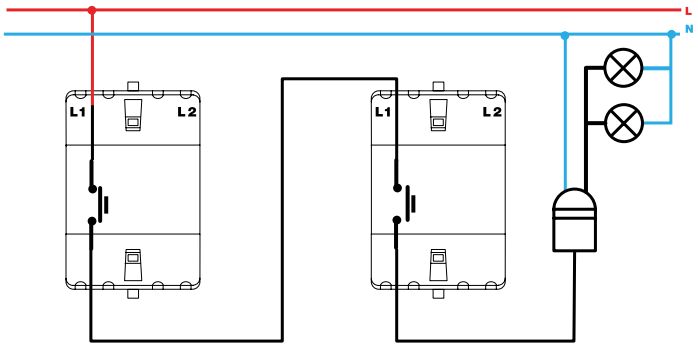

Pulsador desconexión / Push button desconexion switch
XXXX152-XXX

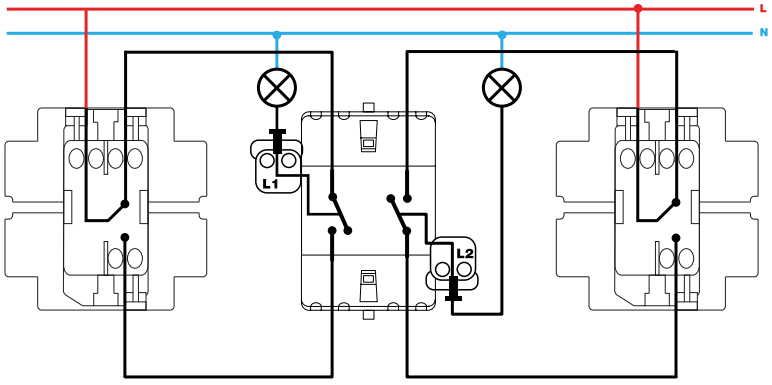

Grupo dos conmutadores / 2-way switches group
XXXX397-XXX

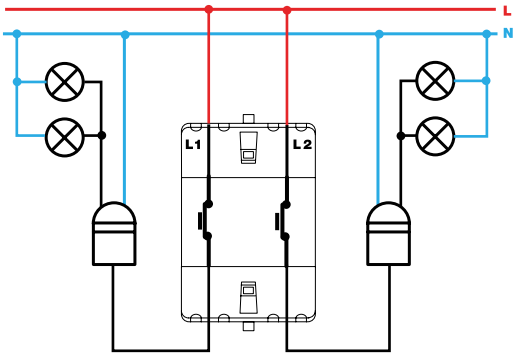

Grupo de pulsadores desconexión / Push button switch desconexion group XXXX395-XXX

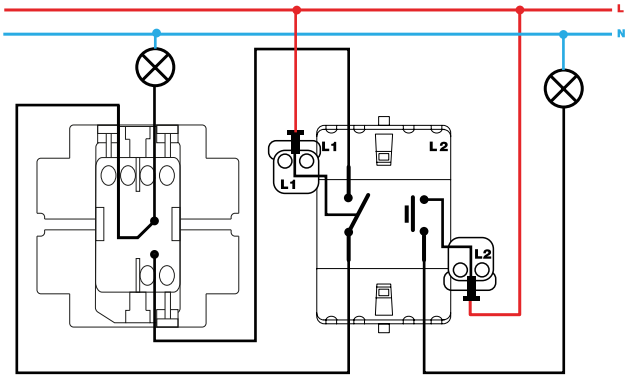

Grupo conmutador y pulsador / 2-way and push button switch group
XXXX301-XXX

Mecanismos con piloto / Pilot switches

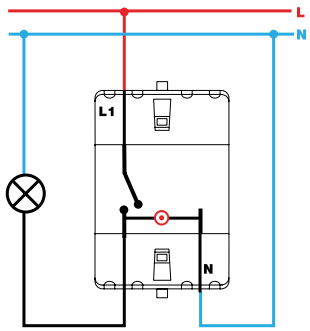

Interruptor unipolar / Single-pole switch
XXXX102-XXX

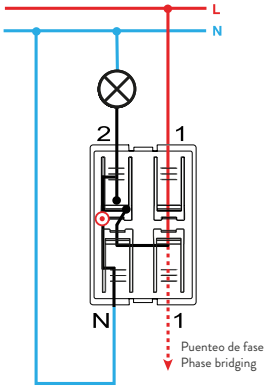

Interruptor con piloto / Push button pilot switch
7700112-039

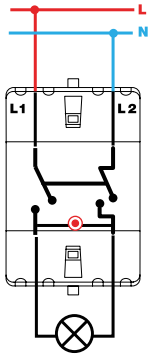

Interruptor bipolar / Double pole switch
XXXX134-XXX

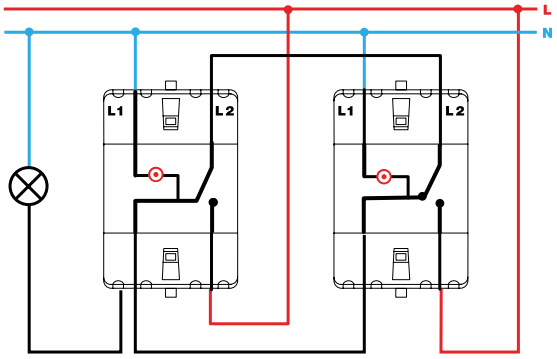

Conmutador / 2-way switch
XXXX202-XXX

Mecanismos con luminoso / Switches with light

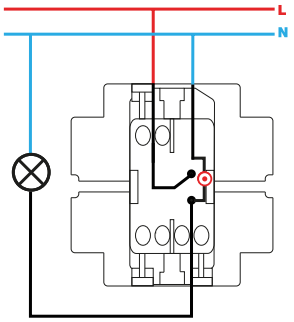

Interruptor unipolar con luminoso / Single-pole switch with light
XXXX104-XXX

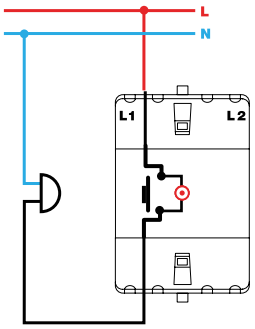

Pulsador con luminoso / Push button switch with light
XXXX160-XXX

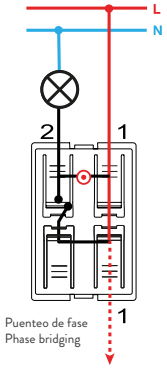

Pulsador con luminoso / Push button switch with light
7700160-039

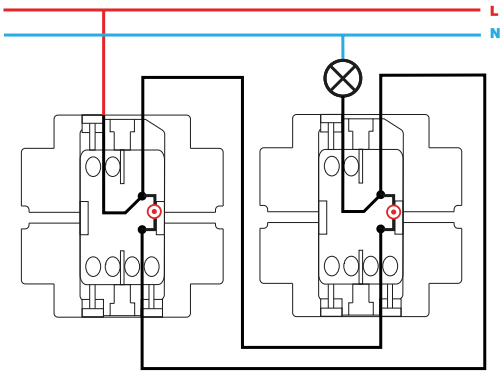

Conmutador con luminoso / 2-way switch with light
XXXX204-XXX

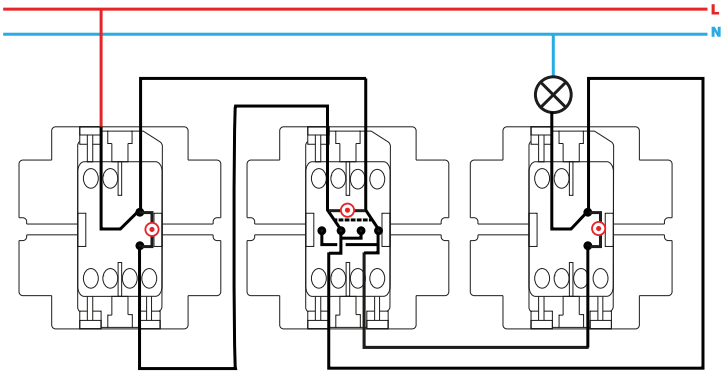

Conmutador cruce con luminoso / Intermediate switch with light
XXXX254-XXX