Cover for French socket IP44 white matte Simon 360

REF. **36002068-190**

BASIC INFORMATION

DESCRIPTION

Cover for French socket with IP44 protection in white finish from the Simon 360 series. The matte finish, in addition to being trendy and integrating into any environment, avoids light reflections and reduces maintenance by minimizing stains and fingerprints. Smooth and high-quality touch that provides a sophisticated product feel in all colors of the series. Urea is the main material and offers high resistance and durability, ensuring a long lifespan. Cover designed for installation in Simon 75 mechanisms.

FINISH

Matt white

MATERIAL

Steel,Thermostable

SYMBOL

IP44

ETIM CLASS

EC000011

REMARKS

Available in 3 matte finishes s360. Frame available in the same colour as the selected interior to create a monochrome set or a two-tone combination. For cleaning, use a cloth slightly dampened with soapy water. Avoid abrasive cloths or cleaners containing chlorine to prevent damage to the product surface.

TECHNICAL INFORMATION

AVAILABLE MARKET
CE

FORMAT
French

INDICATOR FUNCTION
No

IP RATING
IP44

MAINTENANCE
Clean with a soft, dry cloth. Do not use abrasive cloths or cleaning products that contain chlorine.

OPERATING TEMPERATURE RANGE (ºC)
+5...+45

STORAGE TEMPERATURE RANGE (ºC)
-25...+50

INSTALLATION AND MAINTENANCE

REMOVAL OF COVER
Only with tool

INSTALLATION DIRECTION
Horizontal

LOGISTICS INFORMATION

UNITARY EAN CODE
8421053453414

UNITARY PACKAGING HEIGHT
0

UNITARY PACKAGING WIDTH
0

UNITARY PACKAGING LENGTH
0

UNITARY PACKAGING MEASUREMENT UNIT
MMT

UNITARY PACKAGING VOLUME
0

UNITARY PACKAGING VOLUME UNIT
MMQ

UNITARY PACKAGING GROSS WEIGHT
0

PRODUCT NET WEIGHT
0

UNITARY PACKAGING WEIGHT UNIT
KGM

PACKAGING EAN
8421053453162

UNITS CONTAINED PACKAGING
10

PACKAGING HEIGHT
92

PACKAGING WIDTH
176

PACKAGING LENGTH
222

PACKAGING MEASUREMENT UNIT
MMT

PACKAGING VOLUME
3594624

PACKAGING VOLUME UNIT
MMQ

PACKAGING GROSS WEIGHT
0.5

PACKAGING NET WEIGHT
0

PACKAGING WEIGHT UNIT
KGM

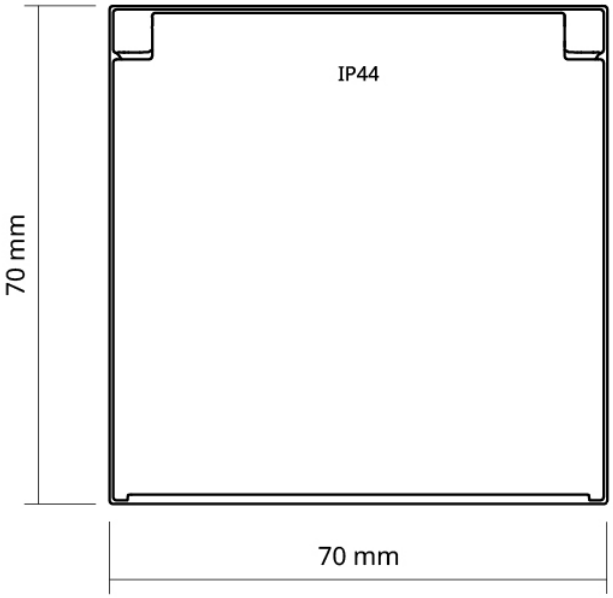
IP44
70 mm
70 mm

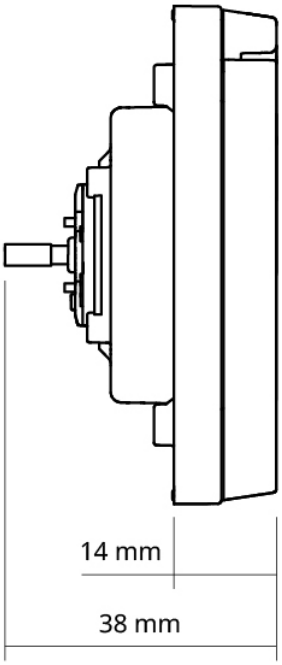
14 mm
38 mm

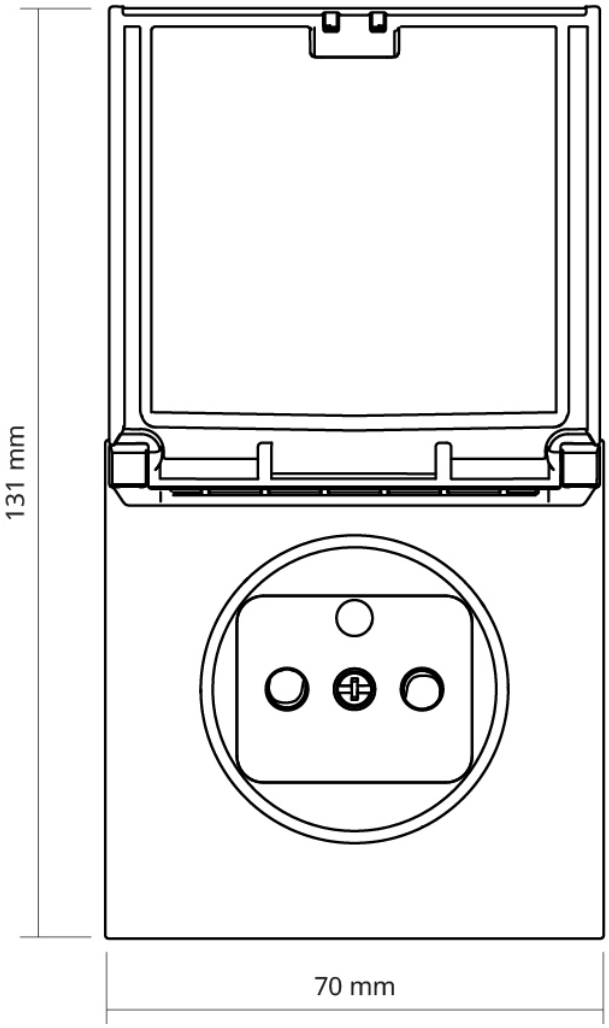
131 mm
70 mm

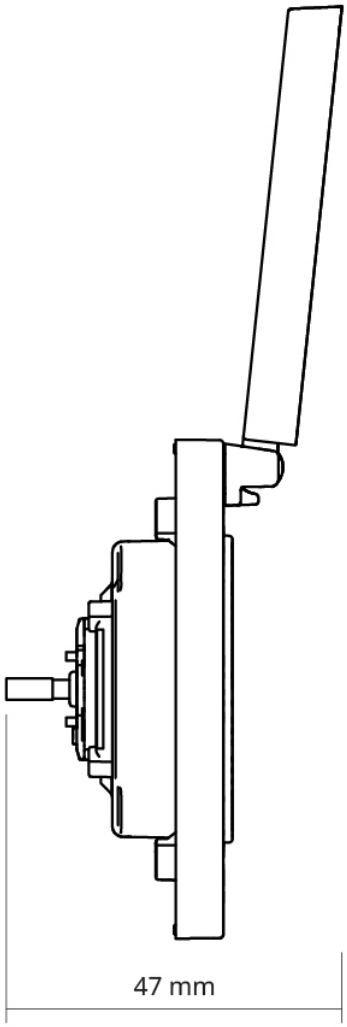
47 mm