Two-way switch 16 AX 250V~ with quick terminal connection Simon 75

REF. **75211-39**

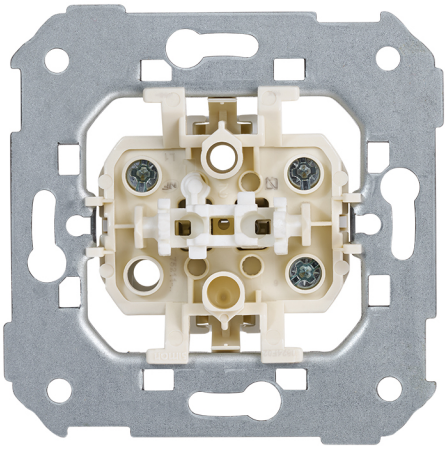

BASIC INFORMATION

DESCRIPTION

Switch with a current of 16 AX and a power of 250 V~ which does not include a luminous signal pilot but does add a quick terminal connection system belonging to the Simon 75 range and available in the "control mechanisms" category. It also features a tilting operating type. It is possible to implement the signaling function through a signaling support and a key with a viewer. They are compatible with the Simon 75 and 82 series. It is possible to terminate without stripping a single wire with the switch.

For installation, it is suitable for flush or surface mounting in universal mechanism boxes. Thanks to the manufacturing with metal components with thermoplastic insulation and halogen-free, it can comply with the UNE-EN 60669-1:2002 + A1:2003 + A2:2009 regulation, allowing its use within minimum temperature intervals of 5ºC and a maximum of 40ºC.

MATERIAL

Plastic,Metal

COMPATIBILITY

Marcos Simon 75, Simon 82 Detail, Simon 82 Nature, Simon 82 Concept, and Simon 82.

PACKAGING CONTENTS

Mechanism

ETIM CLASS

EC001590

TECHNICAL INFORMATION

AVAILABLE MARKET
CE

CABLE SECTION ADMITTED (MM)
From 1,5 to 2,5 mm

NUMBER OF CONTACTS
3

NUMBER OF POSSIBLE ELEMENTS
1 element

FREQUENCY
50 Hz

INDICATOR FUNCTION
No

CURRENT (A)
16 AX

IP RATING
IP21

LINKABLE
No

TYPE OF MECHANISM
Pivoting

MONOBLOCK
No

NOMINAL VOLTAGE (V~)
250 V~

OPERATING TEMPERATURE RANGE (°C)
5 - 40 °C

RECESS DIMENSION (MM)
40

STORAGE TEMPERATURE RANGE (°C)
-25 - 50 °C

VERSION
Single

VOLTAGE (V~)
250 V~

NUMBER OF WIRES
3

INSTALLATION AND MAINTENANCE

CABLE STRIPPING NECESSARY (MM)
13

CLAW
Simon 27

REMOVAL OF COVER
Only with tool

INSTALLABLE IN FLUSH MOUNT JUNCTION BOX
Universal

INSTALLATION TYPE
Suitable for surface and flush mounting

TYPE OF TERMINAL CONNECTION - FUNCTION 1
Screw

REGULATIONS

REGULATIONS
Dir. 2014/35/UE LVD|Dir. 2011/65/UE RoHS + post. mod.|EN 60669-1:2018|EN IEC 63000:2018

LOGISTICS INFORMATION

UNITARY EAN CODE
8421053255872

UNITARY PACKAGING HEIGHT
0

UNITARY PACKAGING WIDTH
0

UNITARY PACKAGING LENGTH
0

UNITARY PACKAGING MEASUREMENT UNIT
MMT

UNITARY PACKAGING VOLUME
3017190

UNITARY PACKAGING VOLUME UNIT
MMQ

UNITARY PACKAGING GROSS WEIGHT
0.063

PRODUCT NET WEIGHT
0.063

UNITARY PACKAGING WEIGHT UNIT
KGM

PACKAGING EAN
8421053025321

UNITS CONTAINED PACKAGING
10

PACKAGING HEIGHT
82

PACKAGING WIDTH
165

PACKAGING LENGTH
223

PACKAGING MEASUREMENT UNIT
MMT

PACKAGING VOLUME
3017190

PACKAGING VOLUME UNIT
MMQ

PACKAGING GROSS WEIGHT
0.63

PACKAGING NET WEIGHT
0.63

PACKAGING WEIGHT UNIT
KGM

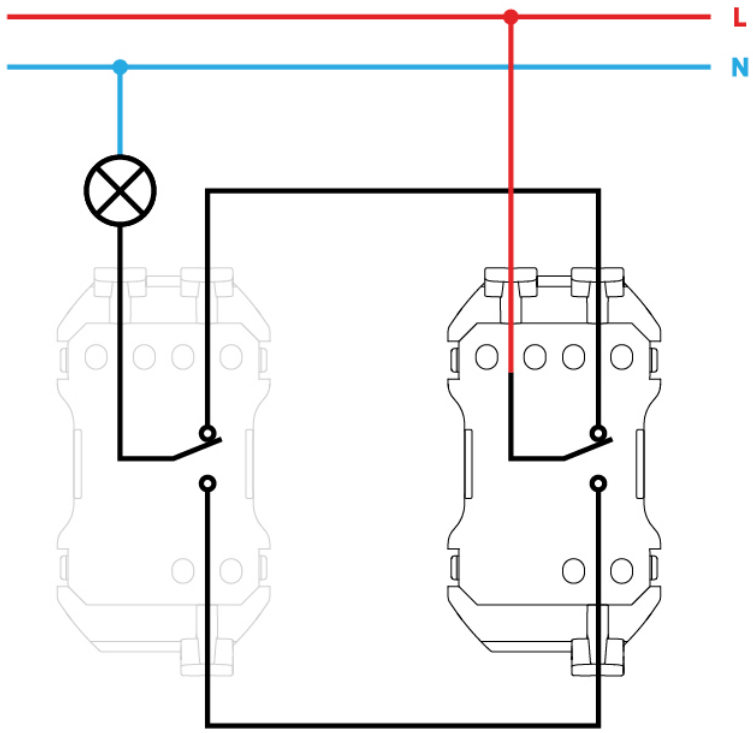
L
N

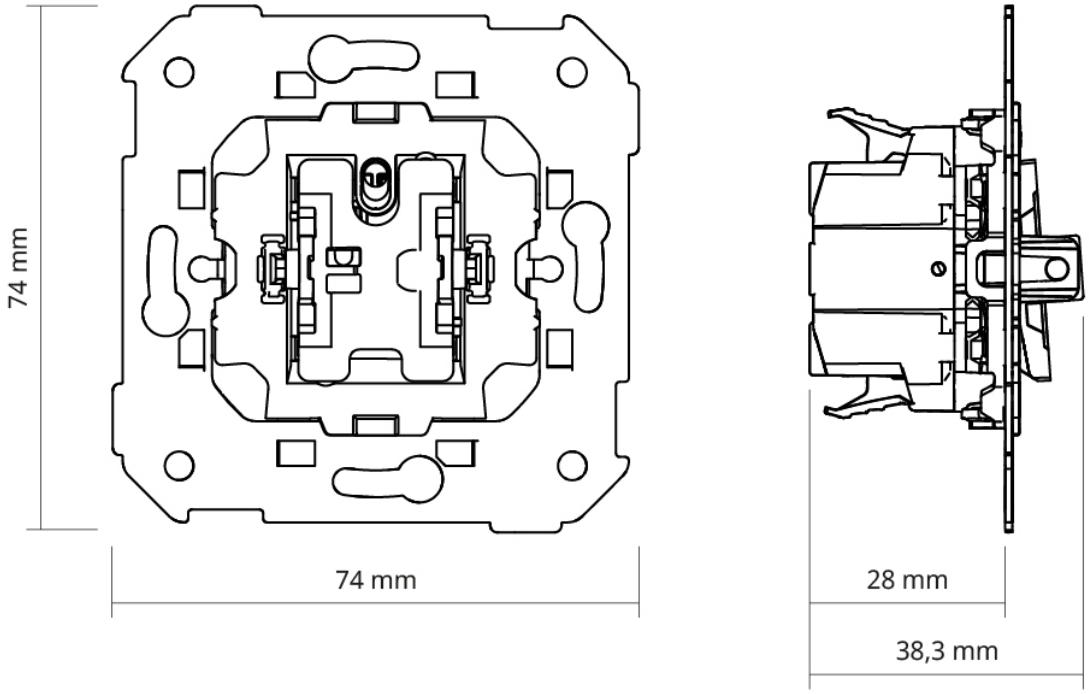
74 mm
74 mm
28 mm
38,3 mm