R-TV+Sat signal outlet, single cava Simon 270

REF. **20000486-094**

BASIC INFORMATION

DESCRIPTION

Single R-TV+SAT signal outlet from the Simon 270 series, for the combined connection of terrestrial television, radio and satellite at a single point. FM/TV male and SAT female output connector, with IEC shielding and 75 Ω impedance. Made of thermoplastic, it measures 45 x 45 mm. Pass band from 47 to 862 MHz for R-TV and from 950 to 2150 MHz for SAT, with a tap attenuation greater than 10 dB. Suitable for flush mounting in a universal back box, in a horizontal position. Protection rating IP20. Operating temperature range: 5 to 45 °C. Storage temperature range: -25 to 50 °C. Clean with a soft cloth lightly dampened with soapy water, avoiding abrasive or chlorine-based cleaners. Up to 9 available finish colours: 090 Glossy White; 190 Matte White; 091 Copper; 093 Aluminium; 094 Champagne; 095 Gold; 096 Titanium; 097 Bronze; 098 Matte Black.

FINISH

Matt champagne

MATERIAL

Thermoplastic

COMPATIBILITY

Simon 270 frames

PACKAGING CONTENTS

R-TV+SAT socket, cover and instruction sheet

ETIM CLASS

EC000439

TECHNICAL INFORMATION

AVAILABLE MARKET
CE

COMPATIBLE 12V AC/DC
No

COMPATIBLE 230V AC/DC
No

CABLE SECTION ADMITTED (MM)
From 1,5 to 2,5 mm

CONNECTOR TYPE
R/TV+SAT

NUMBER OF POSSIBLE ELEMENTS
1 element

FORMAT
R/TV,SAT

IP RATING
IP20

MAINTENANCE
Clean with a soft, dry cloth. Do not use abrasive cloths or cleaning products that contain chlorine.

TYPE OF MECHANISM
Insertion

OPERATING TEMPERATURE RANGE (ºC)
5 - 45 ºC

RAL
7048

STORAGE TEMPERATURE RANGE (ºC)
-25 - 50 ºC

TV TAP LOSS (MHZ)
0,6 dB (<2,5 dB a 862 MHz)

SAT TAP LOSS (MHZ)
1,5 dB (<2,8 dB a 950 MHz)

TAP ATTENUATION (DB)
>10 dB

INSTALLATION AND MAINTENANCE

CABLE STRIPPING NECESSARY (MM)
8

INSTALLABLE IN FLUSH MOUNT JUNCTION BOX
Universal

INSTALLATION DIRECTION
Horizontal, Vertical

INSTALLATION TYPE
Suitable for flush mounting

TYPE OF TERMINAL CONNECTION - FUNCTION 1
Screw

REGULATIONS

REGULATIONS
Dir. 2014/30/UE EMC | Dir. 2011/65/UE RoHS + post. mod. | EN 50083-2:2012 + A1:2015 | EN IEC 63000:2018

LOGISTICS INFORMATION

UNITARY EAN CODE
8421053266113

UNITARY PACKAGING HEIGHT
0

UNITARY PACKAGING WIDTH
0

UNITARY PACKAGING LENGTH
0

UNITARY PACKAGING MEASUREMENT UNIT
MMT

UNITARY PACKAGING VOLUME
0

UNITARY PACKAGING VOLUME UNIT
MMQ

UNITARY PACKAGING GROSS WEIGHT
0.088

PRODUCT NET WEIGHT
0.088

UNITARY PACKAGING WEIGHT UNIT
KGM

PACKAGING EAN
8421053264836

UNITS CONTAINED PACKAGING
5

PACKAGING HEIGHT
55.5

PACKAGING WIDTH
58

PACKAGING LENGTH
280

PACKAGING MEASUREMENT UNIT
MMT

PACKAGING VOLUME
901320

PACKAGING VOLUME UNIT
MMQ

PACKAGING GROSS WEIGHT
0

PACKAGING NET WEIGHT
0.44

INTERMEDIA
20000487-09

FINAL
20000488-09x

UNICA
20000486-09x

En Serie/Cascada

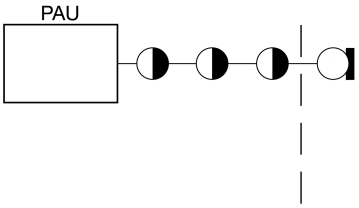

En Estrella

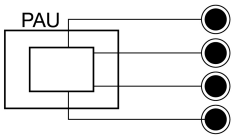

1

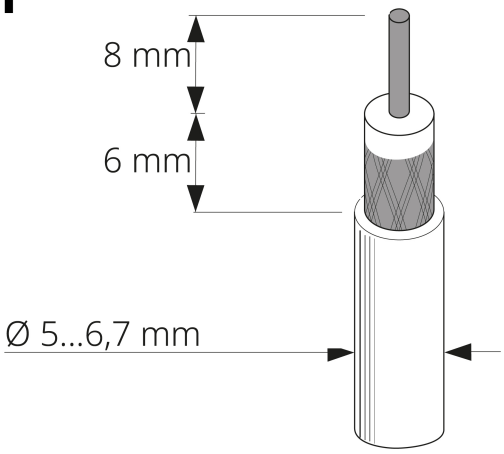

2

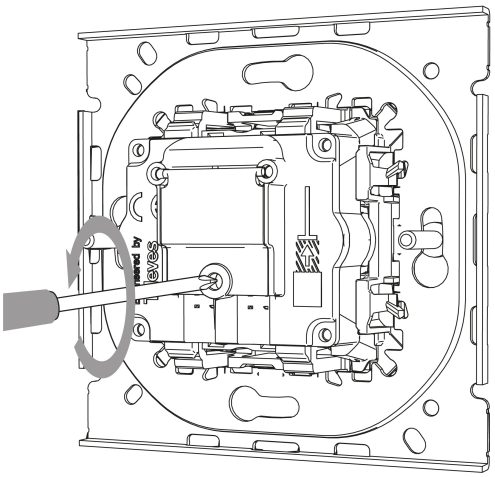

3

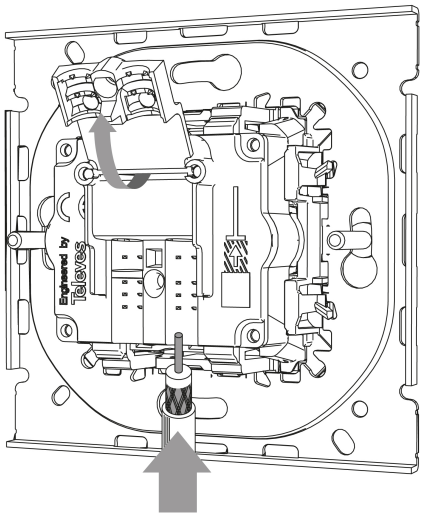

4

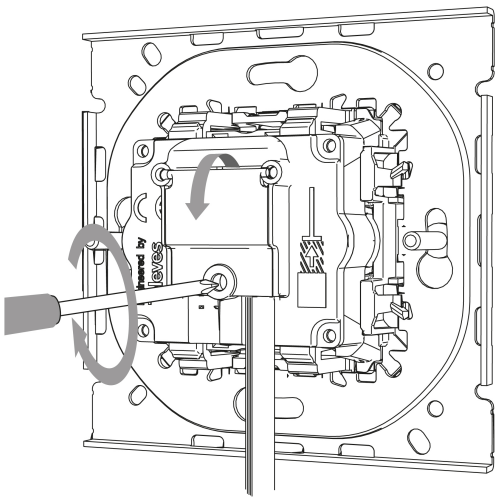

Para información más detallada consultar la hoja de instrucciones
For more detailed information check the instruction sheet