Double intermediate switch push-button 10AX 250V~ with quick terminal connection system Simon 360

REF. **36012251-039**

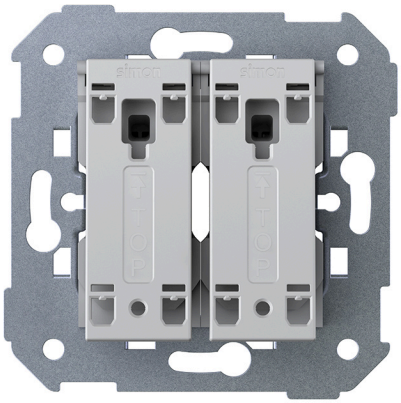

BASIC INFORMATION

DESCRIPTION

Double intermediate switch push-button 10AX 250V~ with quick terminal connection system from the Simon 360 series. The push-button mechanism allows all keys to be aligned in any configuration. Pleasure to the touch, sound, and visual balance.

MATERIAL

Plastic,Metal

COMPATIBILITY

Molduras Simon 360

ETIM CLASS

EC001590

TECHNICAL INFORMATION

NUMBER OF CONTACTS
8

FORMAT
Push-button

FREQUENCY
50 - 60 Hz

INDICATOR FUNCTION
No

CURRENT (A)
10 AX

IP RATING
IP20

LINKABLE
No

MONOBLOCK
No

NOMINAL VOLTAGE (V~)
250 V~

POWER SUPPLY (V~)
127/230 V~

RECESS DIMENSION (MM)
40

VOLTAGE (V~)
127/230 V~

NUMBER OF WIRES
8

INSTALLATION AND MAINTENANCE

CABLE STRIPPING NECESSARY (MM)
15

CLAW
Simon 27

REMOVAL OF COVER
Only with tool

INSTALLATION DIRECTION
Horizontal, Vertical

TYPE OF TERMINAL CONNECTION - FUNCTION 1
Fast

LOGISTICS INFORMATION

UNITARY EAN CODE
8421053438565

UNITARY PACKAGING HEIGHT
0

UNITARY PACKAGING WIDTH
0

UNITARY PACKAGING LENGTH
0

UNITARY PACKAGING MEASUREMENT UNIT
MMT

UNITARY PACKAGING VOLUME
0

UNITARY PACKAGING VOLUME UNIT
MMQ

UNITARY PACKAGING GROSS WEIGHT
0.08

PRODUCT NET WEIGHT
0.08

UNITARY PACKAGING WEIGHT UNIT
KGM

PACKAGING EAN
8421053438572

UNITS CONTAINED PACKAGING
10

PACKAGING HEIGHT
85

PACKAGING WIDTH
164

PACKAGING LENGTH
220

PACKAGING MEASUREMENT UNIT
MMT

PACKAGING VOLUME
3066800

PACKAGING VOLUME UNIT
MMQ

PACKAGING GROSS WEIGHT
0.9

PACKAGING NET WEIGHT
0.75

PACKAGING WEIGHT UNIT
KGM

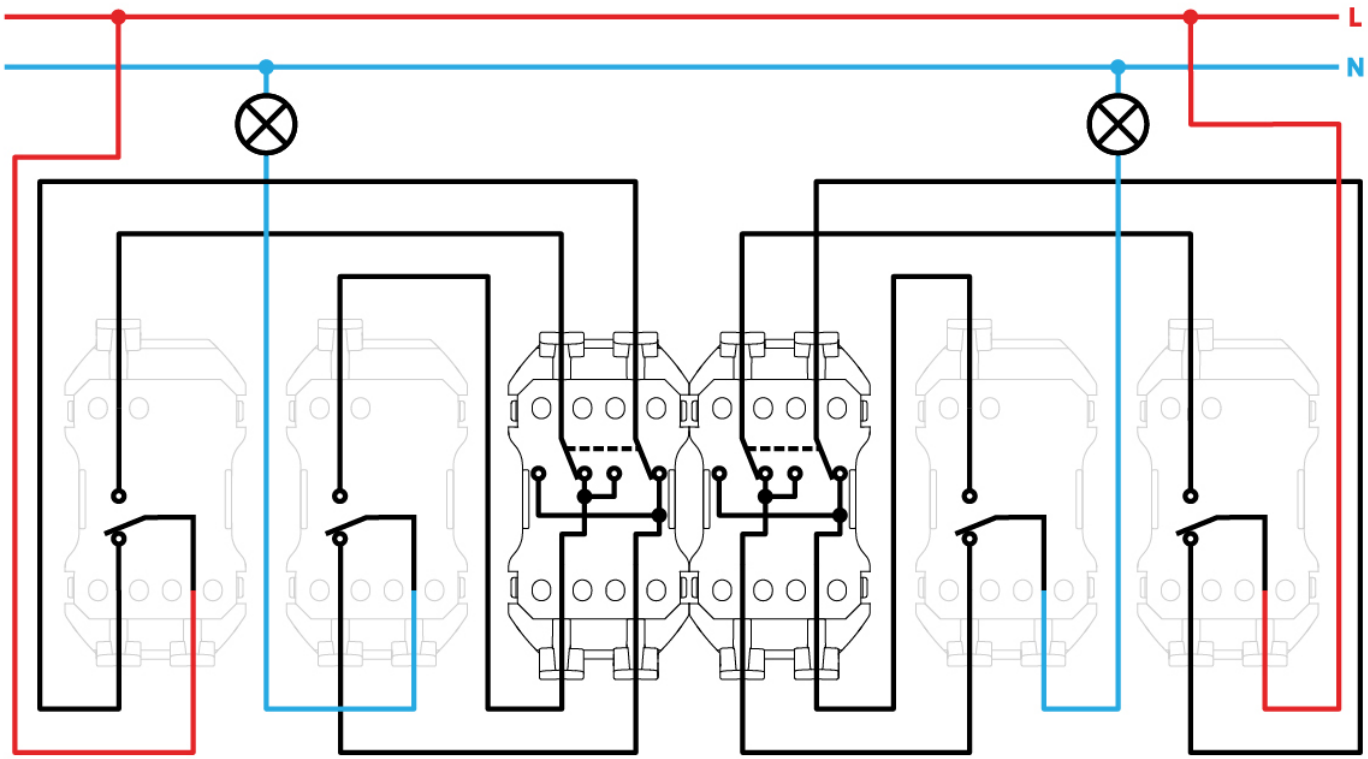
L
N

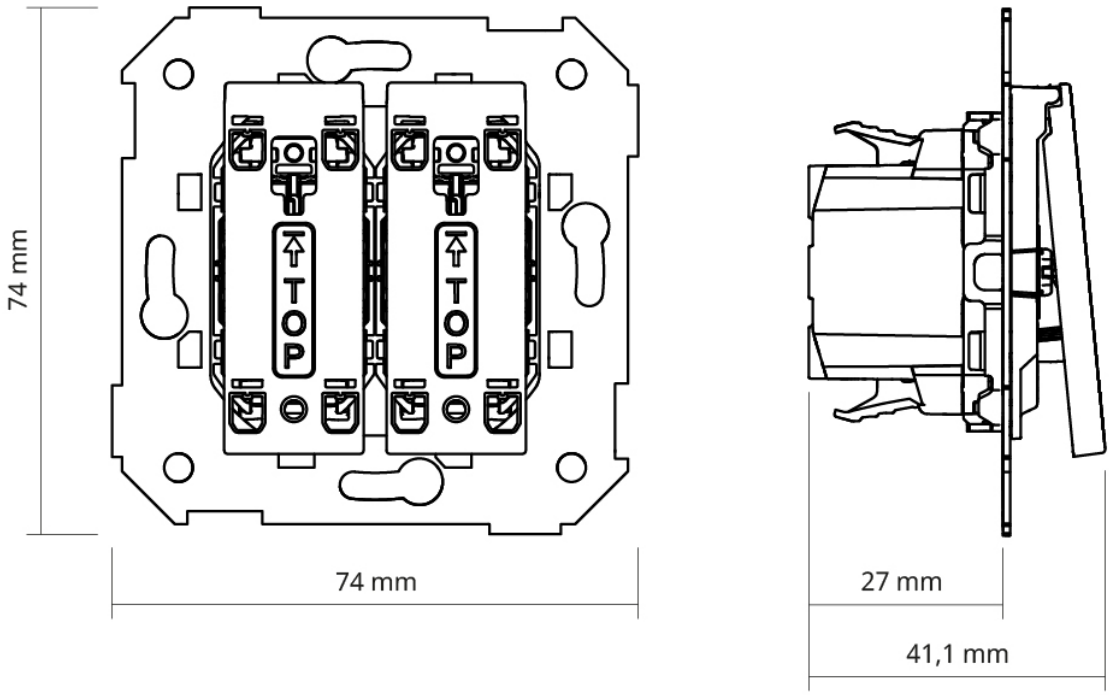
74 mm
TOP
TOP
74 mm
27 mm
41,1 mm