# R-TV+Sat signal outlet, single matt white Simon 270

REF. **20000486-190**

## BASIC INFORMATION

### DESCRIPTION

Single R-TV+SAT signal outlet from the Simon 270 series, for the combined connection of terrestrial television, radio and satellite at a single point. FM/TV male and SAT female output connector, with IEC shielding and 75 Ω impedance. Made of thermoplastic, it measures 45 x 45 mm. Pass band from 47 to 862 MHz for R-TV and from 950 to 2150 MHz for SAT, with a tap attenuation greater than 10 dB. Suitable for flush mounting in a universal back box, in a horizontal position. Protection rating IP20. Operating temperature range: 5 to 45 °C. Storage temperature range: -25 to 50 °C. Clean with a soft cloth lightly dampened with soapy water, avoiding abrasive or chlorine-based cleaners. Up to 9 available finish colours: 090 Glossy White; 190 Matte White; 091 Copper; 093 Aluminium; 094 Champagne; 095 Gold; 096 Titanium; 097 Bronze; 098 Matte Black.

### FINISH

Matt white

### COMPATIBILITY

Simon 270 frames

### MATERIAL

Thermoplastic

### ETIM CLASS

EC000439

## TECHNICAL INFORMATION

### AVAILABLE MARKET
CE

### COMPATIBLE 12V AC/DC
No

### COMPATIBLE 230V AC/DC
No

### CONNECTOR TYPE
R/TV+SAT

### FORMAT
R/TV,SAT

### IP RATING
IP20

### MAINTENANCE
Clean with a soft cloth and soapy water. Do not use abrasive cloths and/or cleaners containing chlorine.

### RAL
9003

### TV TAP LOSS (MHZ)
0,6 dB (<2,5 dB a 862 MHz)

### SAT TAP LOSS (MHZ)
1,5 dB (<2,8 dB a 950 MHz)

### TAP ATTENUATION (DB)
>10 dB

## INSTALLATION AND MAINTENANCE

### CABLE STRIPPING NECESSARY (MM)
8

### INSTALLATION DIRECTION
Horizontal

### TYPE OF TERMINAL CONNECTION - FUNCTION 1
Screw

## REGULATIONS

### REGULATIONS
Dir. 2014/30/UE EMC | Dir. 2011/65/UE RoHS + post. mod. | EN 50083-2:2012 + A1:2015 | EN IEC 63000:2018

## LOGISTICS INFORMATION

UNITARY EAN CODE
8421053315026

UNITARY PACKAGING HEIGHT
0

UNITARY PACKAGING WIDTH
0

UNITARY PACKAGING LENGTH
0

UNITARY PACKAGING VOLUME
0

UNITARY PACKAGING GROSS WEIGHT
0.088

PRODUCT NET WEIGHT
0.088

UNITARY PACKAGING WEIGHT UNIT
KGM

PACKAGING EAN
8421053314791

UNITS CONTAINED PACKAGING
10

PACKAGING HEIGHT
55.5

PACKAGING WIDTH
117

PACKAGING LENGTH
280

PACKAGING MEASUREMENT UNIT
MMT

PACKAGING VOLUME
1818180

PACKAGING VOLUME UNIT
MMQ

PACKAGING GROSS WEIGHT
0

PACKAGING NET WEIGHT
0.88

PACKAGING WEIGHT UNIT
KGM

INTERMEDIA
20000487-09

FINAL
20000488-09x

UNICA
20000486-09x

En Serie/Cascada

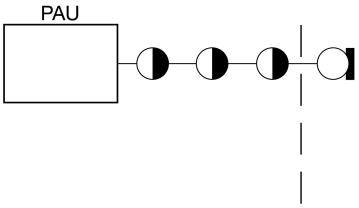


En Estrella

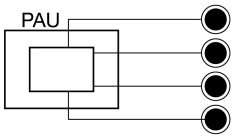


**1**

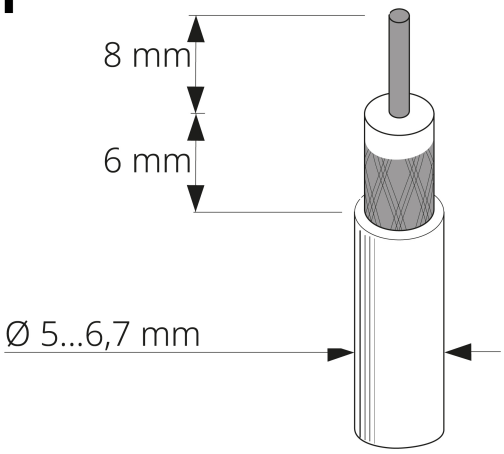


**2**

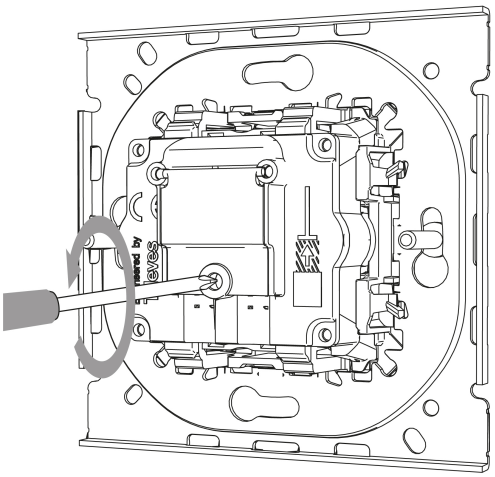

**3**

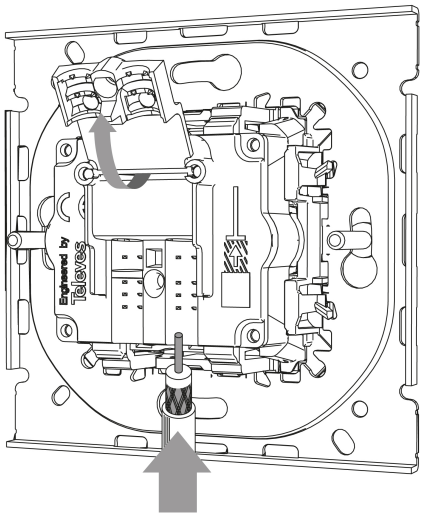

**4**

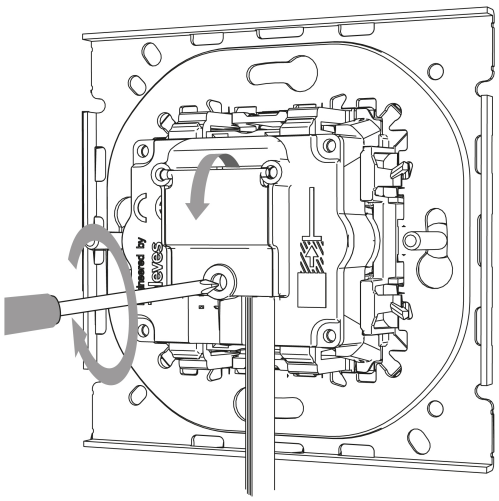

Para información más detallada consultar la hoja de instrucciones
For more detailed information check the instruction sheet