Group of 2 switches 10 AX 250V~ with quick terminal connection system Simon 75

REF. **75398-39**

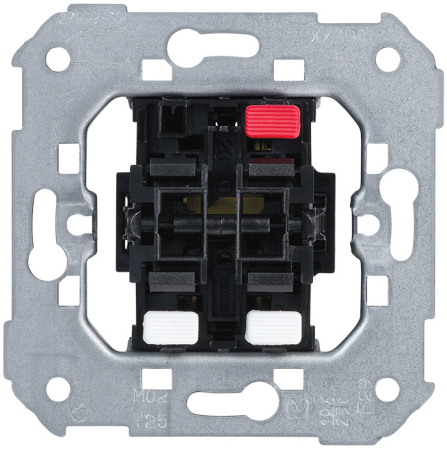

BASIC INFORMATION

DESCRIPTION

Group of 2 unipolar switches 10 AX 250 V~ Simon 75 with quick terminal connection system, designed for the independent cut and closure of two lighting circuits from a single mechanism. It supports a nominal current of 10 AX at 250 V~ 50 Hz, offering an efficient and safe solution for residential and professional installations. It incorporates an insertion connection system that facilitates agile and reliable wiring, accommodating conductors from 1.5 to 2.5 mm^2 with 11 mm stripping. Its tilting operation ensures precise and durable maneuvering for frequent use. Manufactured with metal components and halogen-free thermoplastic insulation, in accordance with EN 60669-1 standards and applicable European directives, it provides safety, durability, and full compatibility with the Simon 75 series and compatible frames.

MATERIAL

Plastic,Metal

COMPATIBILITY

Marcos Simon 75, Simon 82 Detail, Simon 82 Nature, Simon 82 Concept and Simon 82.

PACKAGING CONTENTS

Mechanism

ETIM CLASS

EC001590

TECHNICAL INFORMATION

AVAILABLE MARKET
CE

CABLE SECTION ADMITTED (MM)
From 1,5 to 2,5 mm

NUMBER OF CONTACTS
3

NUMBER OF POSSIBLE ELEMENTS
1 element

FREQUENCY
50 Hz

INDICATOR FUNCTION
No

CURRENT (A)
10 AX

IP RATING
IP21

LINKABLE
No

TYPE OF MECHANISM
Pivoting

MONOBLOCK
No

NOMINAL VOLTAGE (V~)
250 V~

OPERATING TEMPERATURE RANGE (°C)
5 - 40 °C

RECESS DIMENSION (MM)
30

STORAGE TEMPERATURE RANGE (°C)
-25 - 50 °C

VERSION
Double

VOLTAGE (V~)
250 V~

NUMBER OF WIRES
4

INSTALLATION AND MAINTENANCE

CABLE STRIPPING NECESSARY (MM)
11

CLAW
Simon 27

REMOVAL OF COVER
Only with tool

INSTALLABLE IN FLUSH MOUNT JUNCTION BOX
Universal

INSTALLATION TYPE
Suitable for surface and flush mounting

TYPE OF TERMINAL CONNECTION - FUNCTION 1
Fast

REGULATIONS

REGULATIONS
Dir. 2014/35/UE LVD | Dir. 2011/65/UE RoHS + post. mod. | EN 60669-1:2018 | EN IEC 63000:2018

LOGISTICS INFORMATION

UNITARY EAN CODE
8421053256046

UNITARY PACKAGING HEIGHT
0

UNITARY PACKAGING WIDTH
0

UNITARY PACKAGING LENGTH
0

UNITARY PACKAGING MEASUREMENT UNIT
MMT

UNITARY PACKAGING VOLUME
0

UNITARY PACKAGING VOLUME UNIT
MMQ

UNITARY PACKAGING GROSS WEIGHT
0.062

PRODUCT NET WEIGHT
0.062

UNITARY PACKAGING WEIGHT UNIT
KGM

PACKAGING EAN
8421053003992

UNITS CONTAINED PACKAGING
10

PACKAGING HEIGHT
221

PACKAGING WIDTH
83

PACKAGING LENGTH
165

PACKAGING MEASUREMENT UNIT
MMT

PACKAGING VOLUME
3026595

PACKAGING VOLUME UNIT
MMQ

PACKAGING GROSS WEIGHT
0.625

PACKAGING NET WEIGHT
0.62

PACKAGING WEIGHT UNIT
KGM

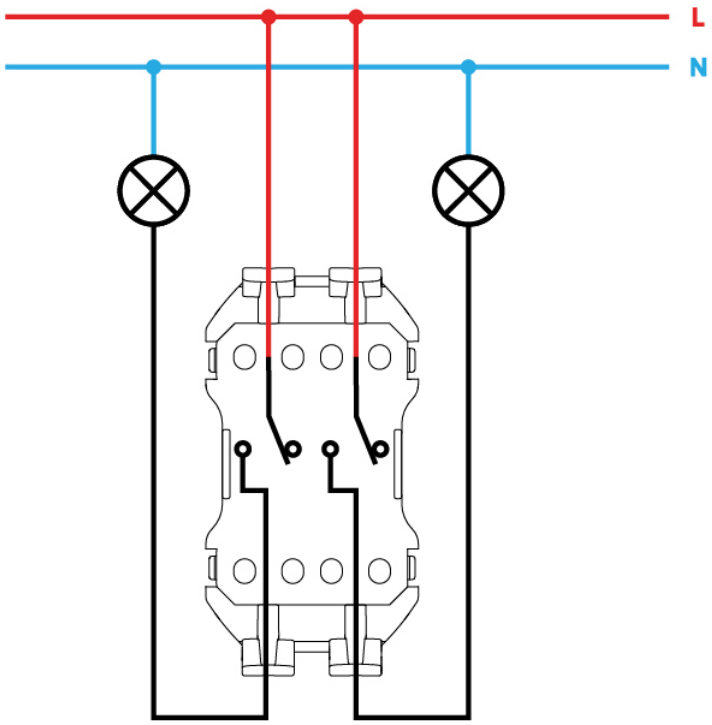
L
N

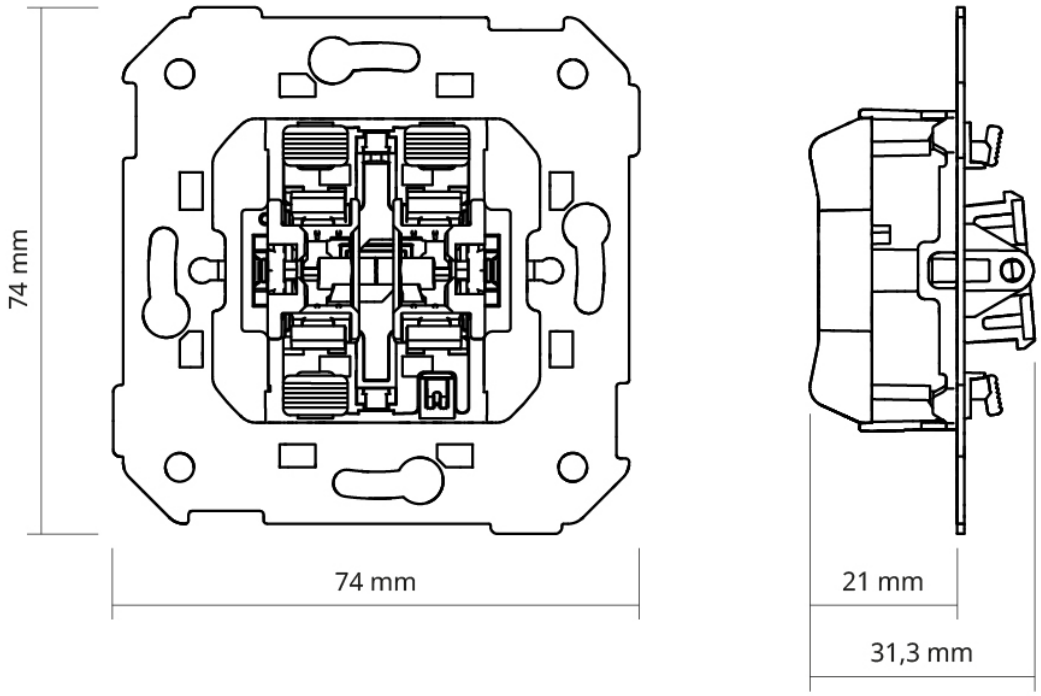
74 mm
74 mm
21 mm
31,3 mm