# iO Slats blinds narrow aluminium Simon 270

REF. **21001359-093**

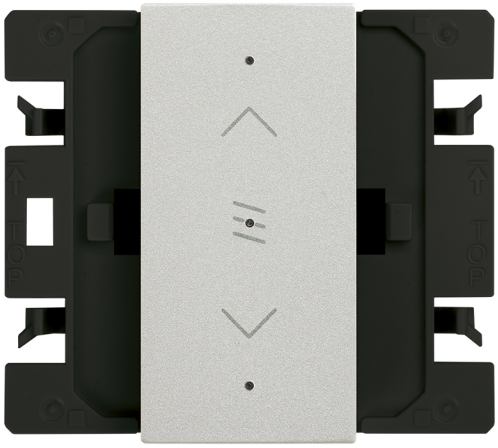

## BASIC INFORMATION

### DESCRIPTION

Discover the iO Slats blinds narrow aluminium Simon 270 from the Simon 270 series. A product designed to deliver functionality, compatibility and style for residential and commercial installations.

### FINISH

Aluminium

### MATERIAL

Plastic

### ETIM CLASS

EC000044

### SYMBOL

Arrow

### COMPATIBILITY

Simon 270 frames

### REMARKS

Device intended for the control of SuperGradhermetic adjustable slat blinds by means of the SOMFY ISG80/83 controller.

## TECHNICAL INFORMATION

### AVAILABLE MARKET
CE

### FREQUENCY
50 - 60 Hz

### INDICATOR FUNCTION
Yes

### CURRENT (A)
10 A

### NUMBER OF SWITCHES
1

### IP RATING
IP20

### MAINTENANCE
Clean with a soft, dry cloth. Do not use abrasive cloths or cleaning products that contain chlorine.

### RAL
9006

## INSTALLATION AND MAINTENANCE

### CABLE STRIPPING NECESSARY (MM)
7

### INSTALLATION DIRECTION
Horizontal, Vertical

### TYPE OF TERMINAL CONNECTION - FUNCTION 1
Screw

## LOGISTICS INFORMATION

UNITARY EAN CODE
8421053302675

UNITARY PACKAGING HEIGHT
0

UNITARY PACKAGING WIDTH
0

UNITARY PACKAGING LENGTH
0

UNITARY PACKAGING VOLUME
0

UNITARY PACKAGING GROSS WEIGHT
0.046

PRODUCT NET WEIGHT
0.046

UNITARY PACKAGING WEIGHT UNIT
KGM

PACKAGING EAN
8421053302675

UNITS CONTAINED PACKAGING
1

PACKAGING HEIGHT
80

PACKAGING WIDTH
55

PACKAGING LENGTH
55

PACKAGING MEASUREMENT UNIT
MMT

PACKAGING VOLUME
242000

PACKAGING VOLUME UNIT
MMQ

PACKAGING GROSS WEIGHT
0.046

PACKAGING NET WEIGHT
0.046

PACKAGING WEIGHT UNIT
KGM

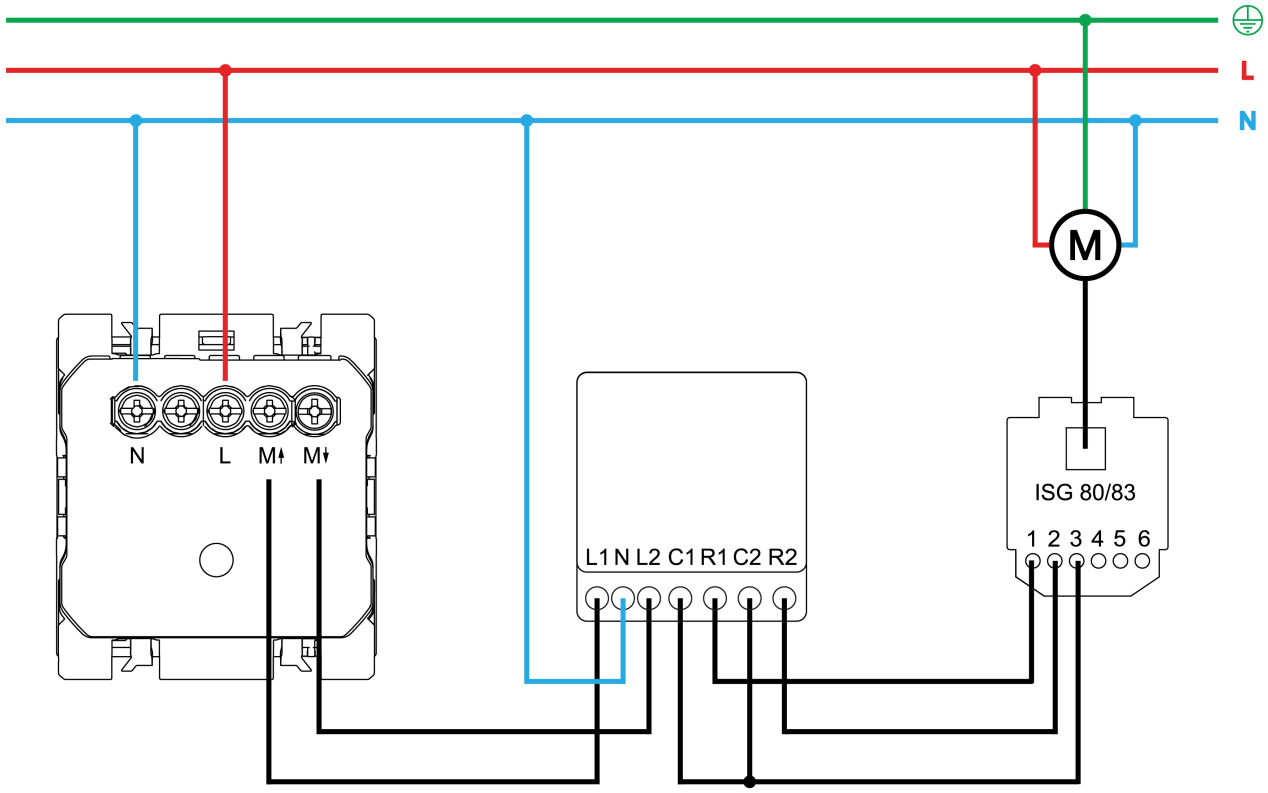


Para información más detallada consultar la hoja de instrucciones
For more detailed information check the instruction sheet