Intermediate switch 10A 250V~ for half element with fast terminal connection system white Simon 27 Play

REF. **27251-64**

BASIC INFORMATION

DESCRIPTION

The crossover switch / 2-way switch de passage of the Simon 27 Play series, you can take several points in the same space in the operate one mechanism with its finished in white, in the individual version close composed of a half element. The reference is 27252-64. Its current is 10A and its voltage of 250V~ It has a quick terminal connection with a rocker operation. It does not include engraving on the plate, the rockers and covers. The wire cross-section passes between 1.5 and the 2.5mm, and the stripping of the wire is 11mm. It measures 22,5x45mm. It is made of metal components with halogen-free thermoplastic insulation and a thermo-stable plastic trim in that resists very well the temperature.

FINISH

White

COMPATIBILITY

Simon 27 Play, Simon 27 Neos, Simon 27 Scudo, Simon 27, Simon 27 Centralisations and Simon 44 Aqua frames

PACKAGING CONTENTS

Mechanism with rocker

ETIM CLASS

EC001590

REMARKS

Possibility of substituting the finish of the rocker supplied with a different one. 5 additional finishes available.

TECHNICAL INFORMATION

AVAILABLE MARKET
CE

CABLE SECTION ADMITTED (MM)
From 1,5 to 2,5 mm

NUMBER OF POSSIBLE ELEMENTS
Half element

INDICATOR FUNCTION
No

CURRENT (A)
10 AX

IP RATING
IP21

MAINTENANCE
Clean with a soft, dry cloth. Do not use abrasive cloths or cleaning products that contain chlorine.

TYPE OF MECHANISM
Pivoting

NOMINAL VOLTAGE (V~)
250 V~

OPERATING TEMPERATURE RANGE (ºC)
5 - 40 ºC

STORAGE TEMPERATURE RANGE (ºC)
-25 - 50 ºC

VERSION
Single

INSTALLATION AND MAINTENANCE

CABLE STRIPPING NECESSARY (MM)
11

CLAW
Simon 27

INSTALLABLE IN FLUSH MOUNT JUNCTION BOX
Universal, American, Small spaces and Centralisations

INSTALLATION DIRECTION
Horizontal, Vertical

INSTALLATION TYPE
Suitable for surface and flush mounting

TYPE OF TERMINAL CONNECTION - FUNCTION 1
Fast

REGULATIONS

REGULATIONS
Dir. 2014/35/UE LVD|Dir. 2011/65/UE RoHS + post. mod.|EN 60669-1:2018|EN IEC 63000:2018

LOGISTICS INFORMATION

UNITARY EAN CODE
8421053251928

UNITARY PACKAGING HEIGHT
22.6

UNITARY PACKAGING WIDTH
38.1

UNITARY PACKAGING LENGTH
45.5

UNITARY PACKAGING MEASUREMENT UNIT
MMT

UNITARY PACKAGING VOLUME
0.039

UNITARY PACKAGING VOLUME UNIT
MMQ

UNITARY PACKAGING GROSS WEIGHT
0.028

PRODUCT NET WEIGHT
0.028

UNITARY PACKAGING WEIGHT UNIT
KGM

PACKAGING EAN
8421053035566

UNITS CONTAINED PACKAGING
20

PACKAGING HEIGHT
53

PACKAGING WIDTH
105

PACKAGING LENGTH
220

PACKAGING MEASUREMENT UNIT
MMT

PACKAGING VOLUME
1.224

PACKAGING VOLUME UNIT
DMQ

PACKAGING GROSS WEIGHT
0.6

PACKAGING NET WEIGHT
0.56

PACKAGING WEIGHT UNIT
KGM

MECANISMOS SIMON 27, 28 Y 44

Mecanismos básicos / Basic switches

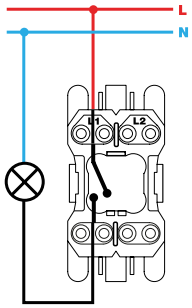

Interruptor unipolar / Single-pole switch
XX00101-XX

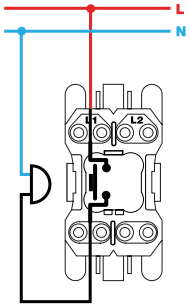

Pulsador / Push button switch
XX00150-XX

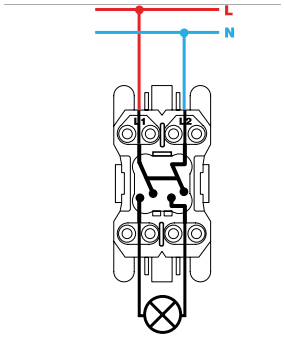

Interruptor bipolar / Double pole switch
XX00133-XX

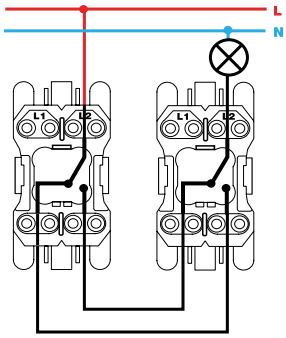

Conmutador / 2-way switch
XX00201-XX

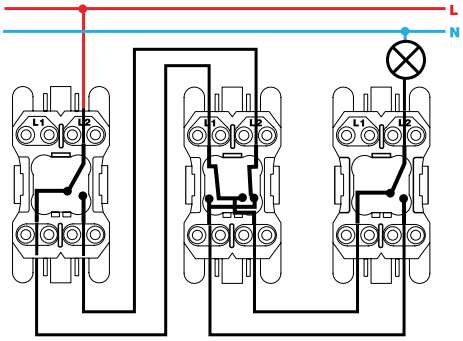

Conmutador cruce / Intermediate switch
XX00251-XX

Mecanismos con piloto / Pilot switches

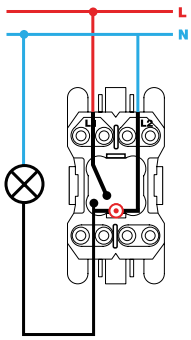

Interruptor unipolar / Single-pole switch
XX00102-XX

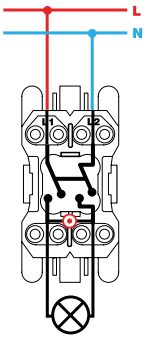

Interruptor bipolar / Double pole switch
XX00134-XX

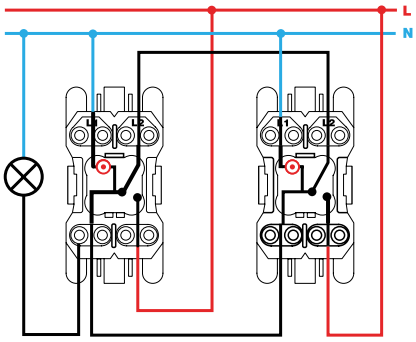

Conmutador / 2-way switch
XX00202-XX

Mecanismos con luminoso / Switches with light

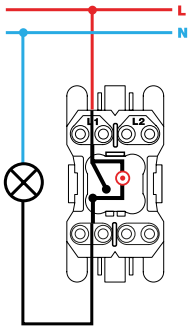

Interruptor unipolar / Single-pole switch
XX00104-XX

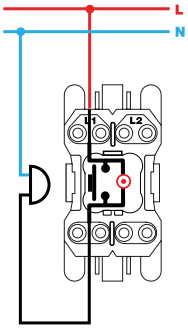

Pulsador / Push button switch
XX00160-XX

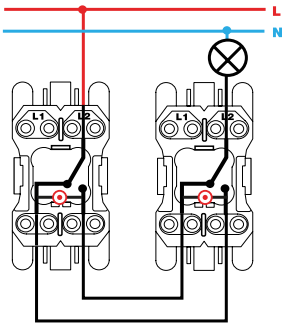

Conmutador / 2-way switch
XX2700204-XX

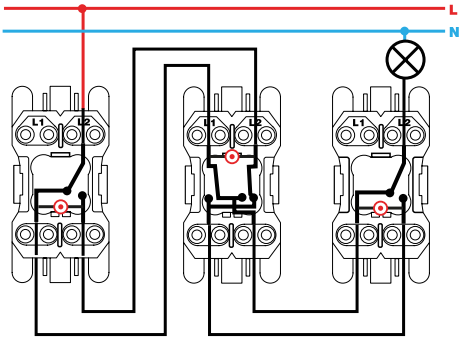

Conmutador cruce / Intermediate switch
XX2700254-XX

VISTA FRONTAL E ISOMÉTRICA DEL PRODUCTO

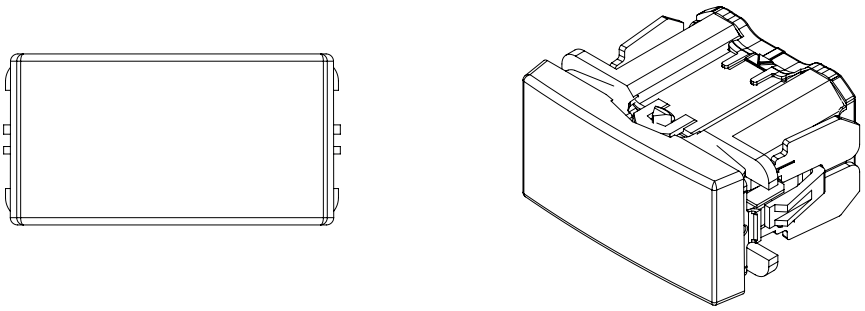

DIAGRAMA DE MONTAJE

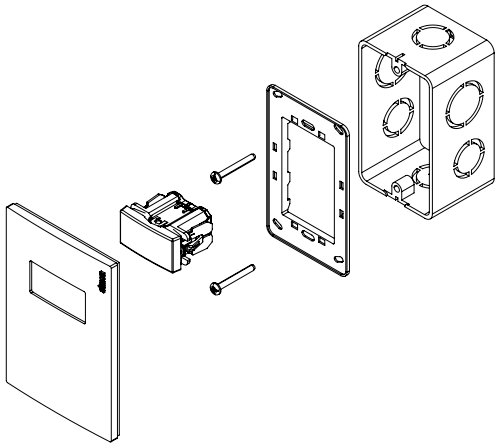

*Placa y chasis NO incluidos
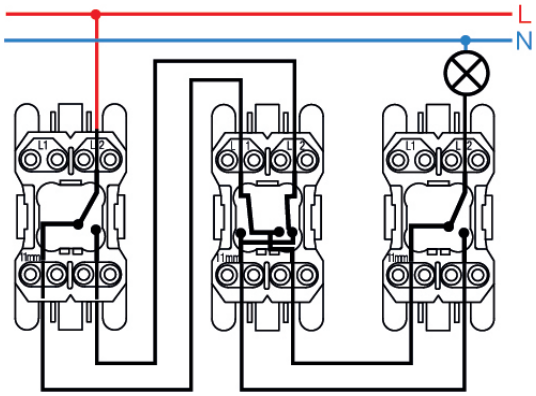
DIAGRAMA DE CONEXIÓN