Modular Euro-American socket 16A 127/250 V~ screw terminal IP44 sand matte Simon 360

REF. **36002439-099**

BASIC INFORMATION

DESCRIPTION

Modular Euro-American socket base 16A 127/250 V~ with screw terminal connection system with IP44 protection in sand finish from the Simon 360 series. Matte finish. The matte finish prevents light reflections and reduces maintenance by minimizing stains and fingerprints. Urea is the main material and it has high resistance and durability, ensuring a long lifespan.

FINISH	MATERIAL	ETIM CLASS
Sand	Steel,Thermostable	EC000125

REMARKS

The socket is supplied in its finished version, so there is no need to purchase another interior mechanism.

simon

TECHNICAL INFORMATION

AVAILABLE MARKET
CE

CABLE SECTION ADMITTED (MM)
1.5...2.5

CONNECTOR TYPE
Euro-American

FORMAT
Euro-American

FREQUENCY
50 - 60 Hz

INDICATOR FUNCTION
No

CURRENT (A)
16 A

IP RATING
IP44

LINKABLE
Yes

MAINTENANCE
Clean with a soft, dry cloth. Do not use abrasive cloths or cleaning products that contain chlorine.

MONOBLOCK
No

NOMINAL VOLTAGE (V~)
250 V~

OPERATING TEMPERATURE RANGE (ºC)
0...+40

POWER SUPPLY (V~)
127/250 V~

RAL
7044

RECESS DIMENSION (MM)
40

STORAGE TEMPERATURE RANGE (ºC)
-25...+75

VOLTAGE (V~)
127/250 V~

NUMBER OF WIRES
3

INSTALLATION AND MAINTENANCE

CABLE STRIPPING NECESSARY (MM)
10

REMOVAL OF COVER
Only with tool

TYPE OF FASTENING
Screw

INSTALLATION DIRECTION
Horizontal

TYPE OF TERMINAL CONNECTION - FUNCTION 1
Screw

LOGISTICS INFORMATION

UNITARY EAN CODE
8421053463512

UNITARY PACKAGING HEIGHT
0

UNITARY PACKAGING WIDTH
0

UNITARY PACKAGING LENGTH
0

UNITARY PACKAGING VOLUME
0

UNITARY PACKAGING GROSS WEIGHT
0

PRODUCT NET WEIGHT
0

UNITARY PACKAGING WEIGHT UNIT
KGM

PACKAGING EAN
8421053453384

UNITS CONTAINED PACKAGING
10

PACKAGING HEIGHT
0

PACKAGING WIDTH
0

PACKAGING LENGTH
0

PACKAGING MEASUREMENT UNIT
MMT

PACKAGING VOLUME
0

PACKAGING VOLUME UNIT
MMQ

PACKAGING GROSS WEIGHT
0

PACKAGING NET WEIGHT
0

PACKAGING WEIGHT UNIT
KGM

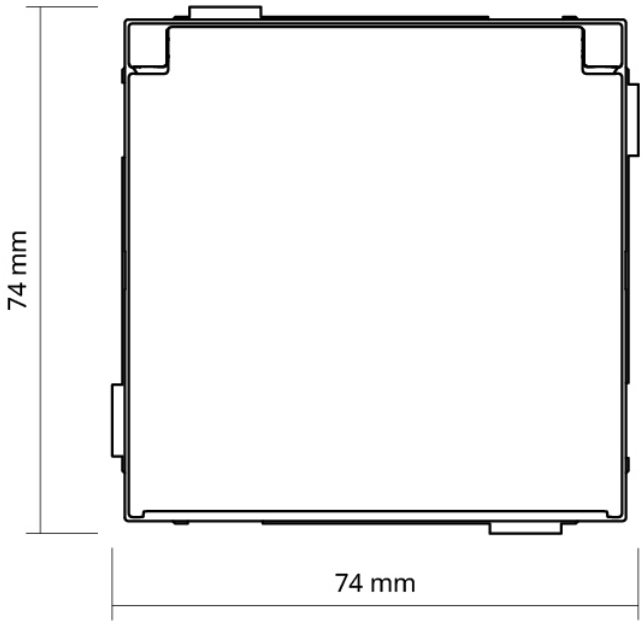
74 mm
74 mm

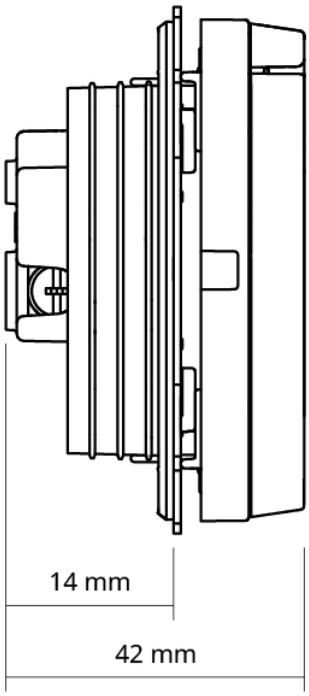
14 mm
42 mm

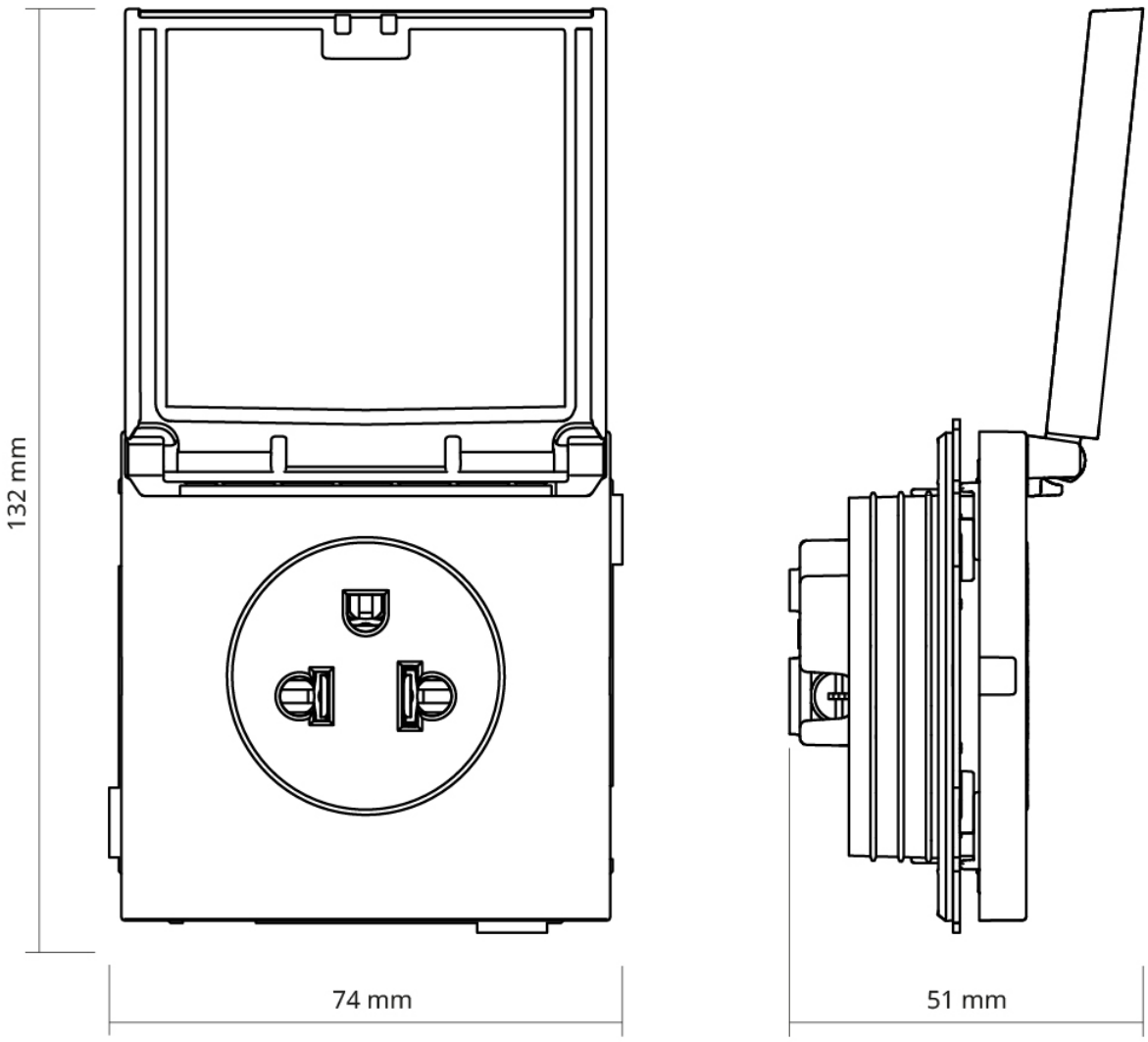
132 mm
74 mm
51 mm