# R-TV+SAT signal socket non-modular single Simon 75

REF. **75486-39**

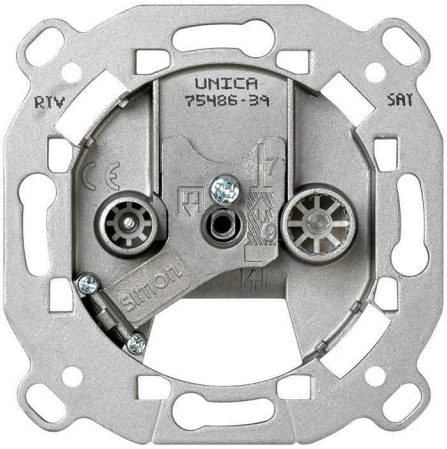


## BASIC INFORMATION

### DESCRIPTION

R-TV+SAT signal socket non-modular unique Simon 75, designed for the combined distribution of radio, terrestrial television, and satellite signals in individual installations. A technical solution that guarantees transmission quality and stability in residential and professional environments. Based on 9.5 mm Ø IEC connectors, it incorporates a screw terminal connection system and push-in operation, ensuring a firm and secure connection. It accepts coaxial cable from 6 to 8 mm with a stripping length of 7 mm for precise installation. Manufactured with metallic components and halogen-free thermoplastic insulation, compliant with EN 50083-2:2013 regulations, it offers durability, safety, and reliable performance within the Simon 75 series and compatible frames.

### MATERIAL

Plastic,Metal

### COMPATIBILITY

Marcos Simon 27 Play, Simon 27 Scudo, Simon 27, Simon 31, Simon 44 Aqua, Simon 75, Simon 82 Detail, Simon 82 Nature, Simon 82 Concept and Simon 82.

### PACKAGING CONTENTS

R/TV+SAT socket and instruction sheet

### ETIM CLASS

EC000439

simon

## TECHNICAL INFORMATION

### AVAILABLE MARKET
CE

### CABLE SECTION ADMITTED (MM)
From 6 to 8 mm

### NUMBER OF CONNECTORS
2

### CONNECTOR TYPE
IEC

### NUMBER OF CONTACTS
2

### NUMBER OF POSSIBLE ELEMENTS
1 element

### FORMAT
R/TV,SAT

### IP RATING
IP20

### LINKABLE
No

### TYPE OF MECHANISM
Multimedia

### OPERATING TEMPERATURE RANGE (ºC)
5 - 40 ºC

### RECESS DIMENSION (MM)
35

### STORAGE TEMPERATURE RANGE (ºC)
-25 - 50 ºC

### VERSION
Single

### NUMBER OF WIRES
1

## INSTALLATION AND MAINTENANCE

### CABLE STRIPPING NECESSARY (MM)
7

### CLAW
Included

### REMOVAL OF COVER
Only with tool

### INSTALLABLE IN FLUSH MOUNT JUNCTION BOX
Universal

### INSTALLATION DIRECTION
Horizontal, Vertical

### INSTALLATION TYPE
Suitable for surface and flush mounting

### TYPE OF TERMINAL CONNECTION - FUNCTION 1
Screw

## REGULATIONS

### REGULATIONS
Dir. 2014/30/UE EMC|Dir. 2011/65/UE RoHS + post. mod.|EN 50083-2:2012|EN 50083-2:2012 A1:2015|EN IEC 63000:2018

## LOGISTICS INFORMATION

UNITARY EAN CODE
8421053256299

UNITARY PACKAGING HEIGHT
0

UNITARY PACKAGING WIDTH
0

UNITARY PACKAGING LENGTH
0

UNITARY PACKAGING MEASUREMENT UNIT
MMT

UNITARY PACKAGING VOLUME
0

UNITARY PACKAGING VOLUME UNIT
MMQ

UNITARY PACKAGING GROSS WEIGHT
0.132

PRODUCT NET WEIGHT
0.112

UNITARY PACKAGING WEIGHT UNIT
KGM

PACKAGING EAN
8421053024966

UNITS CONTAINED PACKAGING
10

PACKAGING HEIGHT
85

PACKAGING WIDTH
165

PACKAGING LENGTH
221

PACKAGING MEASUREMENT UNIT
MMT

PACKAGING VOLUME
3099525

PACKAGING VOLUME UNIT
MMQ

PACKAGING GROSS WEIGHT
1.115

PACKAGING NET WEIGHT
1.12

PACKAGING WEIGHT UNIT
KGM

INTERMEDIA

75487-39
75467-69

FINAL

75488-39
75468-69

UNICA

7500470-039
75486-39
75466-69

En Serie/Cascada

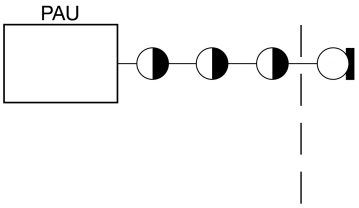


En Estrella

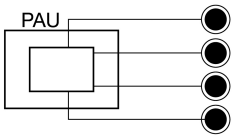


**1**

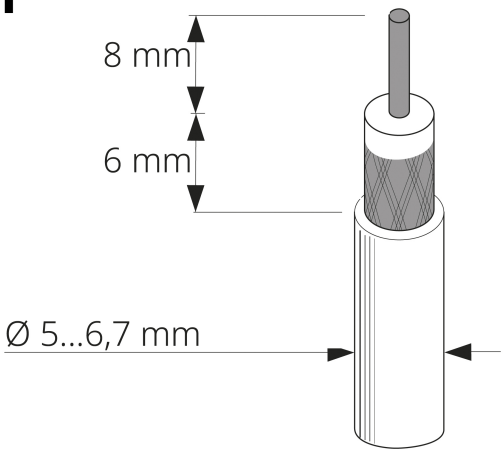


**2**

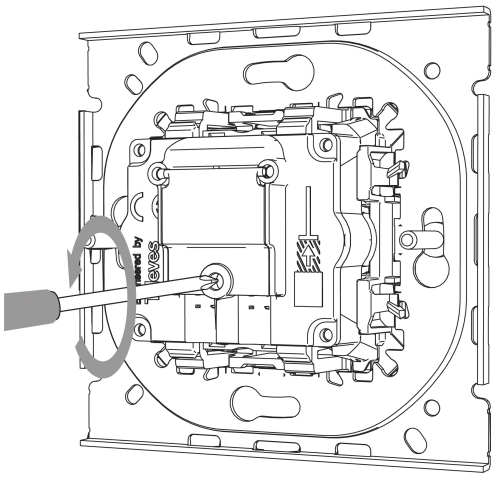

**3**

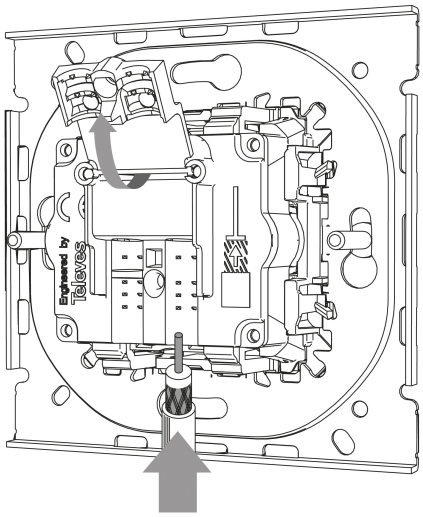

**4**

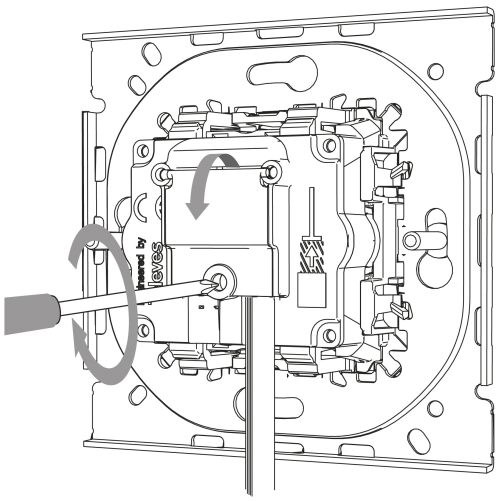

Para información más detallada consultar la hoja de instrucciones
For more detailed information check the instruction sheet

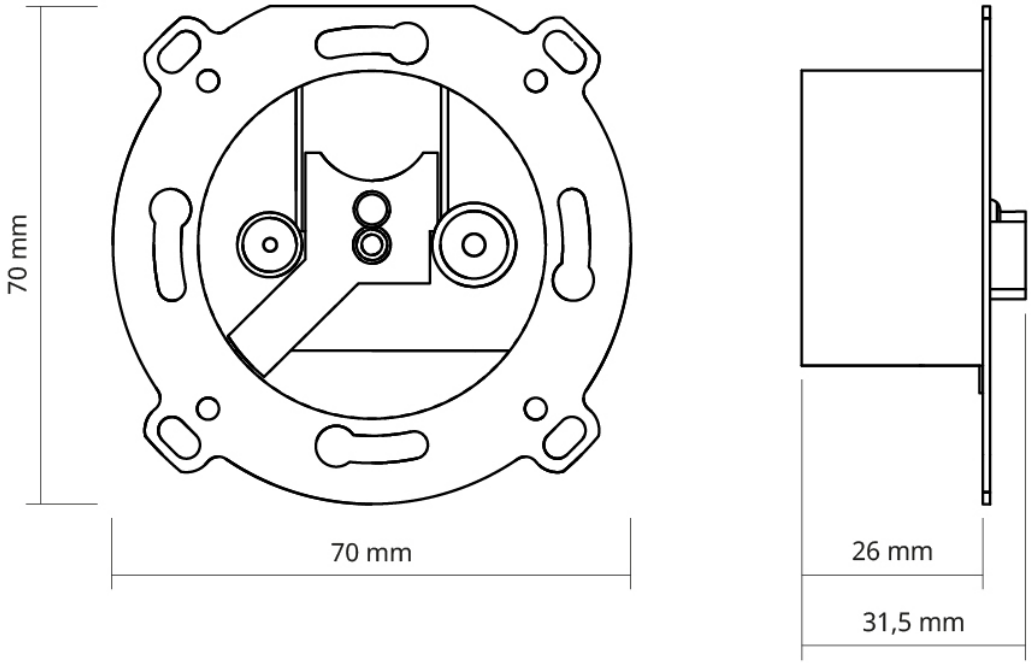
70 mm
70 mm
26 mm
31,5 mm