Frame for 1 element sand matte with aligner Simon 360

REF. **36000610-099**

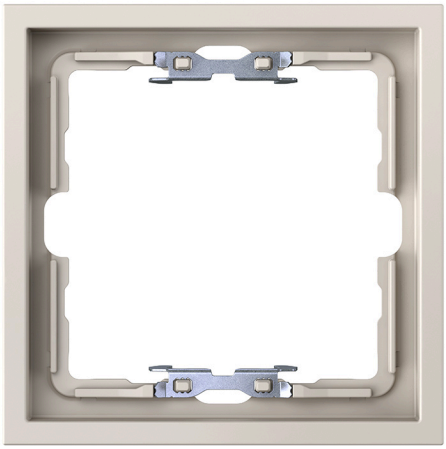

BASIC INFORMATION

DESCRIPTION

Frame for 1 element in sand finish with aligner from the Simon 360 series. The matte finish, in addition to being trendy and integrating into any environment, prevents light reflections and reduces maintenance by minimizing stains and fingerprints. Soft and high-quality touch that provides a sophisticated product feel in all colors of the series. Urea is the main material and has high resistance and durability, ensuring a long service life. Includes the aligner. The aligner, compatible with the S75 platform, provides visual continuity, uniformity in the openings, and flatness on the wall, offering a clean and high-quality visual installation. Ensures the correct operation of the push-button system, which is essential in multiple installations or with Clean Schuko.

FINISH

Sand

COMPATIBILITY

Tampas Simon 360

MATERIAL

Steel,Thermostable

ETIM CLASS

EC000007

REMARKS

Available in 3 matte finishes s360. Available interior with the same color as the selected frame to create a single-color set or the possibility of a bicolor set.

TECHNICAL INFORMATION

IP RATING
IP20

MAINTENANCE
Clean with a soft, dry cloth. Do not use abrasive cloths or cleaning products that contain chlorine.

RAL
7044

INSTALLATION AND MAINTENANCE

REMOVAL OF COVER
Only with tool

INSTALLATION DIRECTION
Horizontal, Vertical

LOGISTICS INFORMATION

UNITARY EAN CODE
8421053437759

UNITARY PACKAGING HEIGHT
0

UNITARY PACKAGING WIDTH
0

UNITARY PACKAGING LENGTH
0

UNITARY PACKAGING MEASUREMENT UNIT
MMT

UNITARY PACKAGING VOLUME
0

UNITARY PACKAGING VOLUME UNIT
MMQ

UNITARY PACKAGING GROSS WEIGHT
0.048

PRODUCT NET WEIGHT
0.043

UNITARY PACKAGING WEIGHT UNIT
KGM

PACKAGING EAN
8421053437766

UNITS CONTAINED PACKAGING
10

PACKAGING HEIGHT
95

PACKAGING WIDTH
103

PACKAGING LENGTH
196

PACKAGING MEASUREMENT UNIT
MMT

PACKAGING VOLUME
1917860

PACKAGING VOLUME UNIT
MMQ

PACKAGING GROSS WEIGHT
0.432

PACKAGING NET WEIGHT
0.43

PACKAGING WEIGHT UNIT
KGM

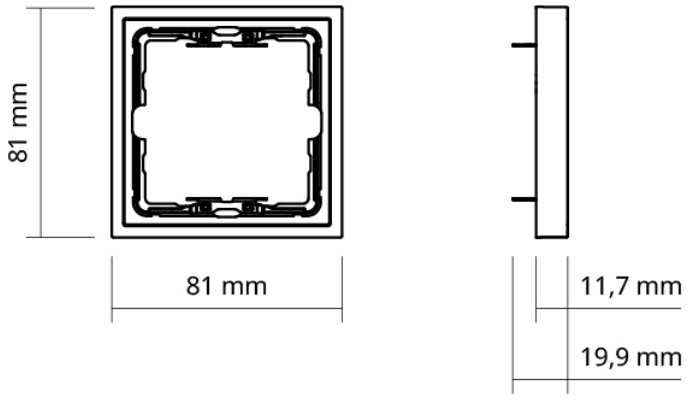
81 mm
81 mm
11,7 mm
19,9 mm