Smoke sensor iO Simon 100

REF. **10002862-039**

BASIC INFORMATION

DESCRIPTION

The iO smoke detector is a battery-powered photoelectric alarm. It is designed to alert you when there is a danger of smoke and fire. When the detected smoke reaches the set limit, the alarm emits visual and acoustic signals and sends a notification to the user's app.

COMPATIBILITY

Simon 100 y Simon 270.

ETIM CLASS

EC001764

REMARKS

This is a Z-Wave Plus® Product using the latest S2 Security Encryption. This product can be operated on any Z-Wave network with other Z-Wave certified devices from other manufacturers. All non-battery operated nodes within the network will act as repeaters regardless of vendor to increase the reliability of the network.

simon

TECHNICAL INFORMATION

INDICATOR FUNCTION
Yes

IP RATING
IP20

POWER SUPPLY (V~)
3 V~

INSTALLATION AND MAINTENANCE

INSTALLATION DIRECTION
Horizontal, Vertical

LOGISTICS INFORMATION

UNITARY EAN CODE
8421053226391

UNITARY PACKAGING HEIGHT
0

UNITARY PACKAGING WIDTH
0

UNITARY PACKAGING LENGTH
0

UNITARY PACKAGING VOLUME
0

UNITARY PACKAGING GROSS WEIGHT
0.118

PRODUCT NET WEIGHT
0.118

UNITARY PACKAGING WEIGHT UNIT
KGM

PACKAGING EAN
8421053226391

UNITS CONTAINED PACKAGING
1

PACKAGING HEIGHT
85

PACKAGING WIDTH
84

PACKAGING LENGTH
84

PACKAGING MEASUREMENT UNIT
MMT

PACKAGING VOLUME
599760

PACKAGING VOLUME UNIT
MMQ

PACKAGING GROSS WEIGHT
0

PACKAGING NET WEIGHT
0.118

PACKAGING WEIGHT UNIT
KGM

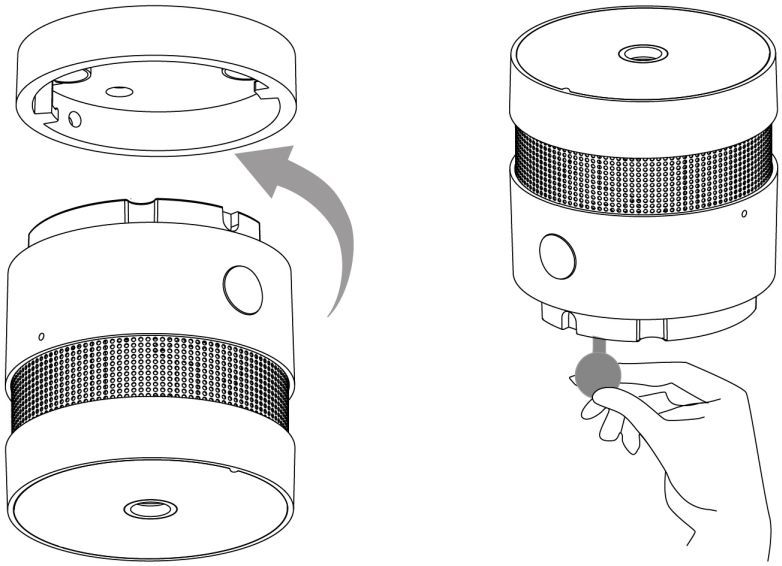

Alimentación pila CR123A3V

Para información más detallada consultar la hoja de instrucciones
For more detailed information check the instruction sheet