French socket base + 2USB A+C Simon 75

REF. **7531458-039**

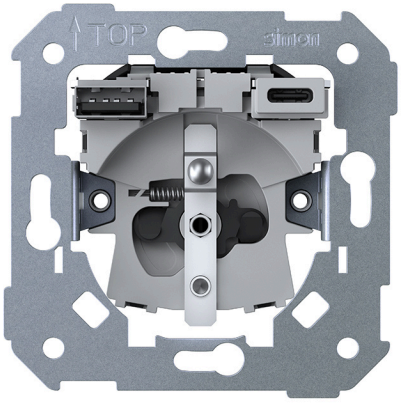

BASIC INFORMATION

DESCRIPTION

French socket base + 2 USB A+C from the Simon 75 series.

MATERIAL

Plastic,Metal

COMPATIBILITY

Tampas Simon 82

ETIM CLASS

EC000125

TECHNICAL INFORMATION

CONNECTOR TYPE
French,USB A + USB C

NUMBER OF CONTACTS
3

NUMBER OF POSSIBLE ELEMENTS
1

FORMAT
French,USB A + USB C

FREQUENCY
50 Hz

CURRENT (A)
16 A

IP RATING
IP20

LINKABLE
Yes

MONOBLOCK
No

NOMINAL VOLTAGE (V~)
230 V~

OPERATING TEMPERATURE RANGE (ºC)
0...+35

POWER SUPPLY (V~)
250 V~

RECESS DIMENSION (MM)
45

NUMBER OF SOCKETS
1

STORAGE TEMPERATURE RANGE (ºC)
-25...+50

USB CHARACTERISTICS
USB A+C= 5,0 VDC 2,1 A 10,5W ;
USB A= 5,0 VDC 2,1 A 10,5W ;
USB C= 5,0 VDC 2,1 A 10,5W

USB CURRENT (A)
2,1 A

USB PORT TYPE
C

POWER DELIVERY USB
No

QUICK CHARGE USB
No

USB VOLTAGE (V~)
5 Vdc

VOLTAGE (V~)
230 V~

NUMBER OF WIRES
3

INSTALLATION AND MAINTENANCE

CABLE STRIPPING NECESSARY (MM)
12

CLAW
Not possible

REMOVAL OF COVER
Only with tool

TYPE OF TERMINAL CONNECTION - FUNCTION 1
Screw

LOGISTICS INFORMATION

UNITARY EAN CODE
8421053439104

UNITARY PACKAGING HEIGHT
0

UNITARY PACKAGING WIDTH
0

UNITARY PACKAGING LENGTH
0

UNITARY PACKAGING MEASUREMENT UNIT
MMT

UNITARY PACKAGING VOLUME
0

UNITARY PACKAGING VOLUME UNIT
MMQ

UNITARY PACKAGING GROSS WEIGHT
0

PRODUCT NET WEIGHT
0

UNITARY PACKAGING WEIGHT UNIT
KGM

PACKAGING EAN
8421053439104

UNITS CONTAINED PACKAGING
1

PACKAGING HEIGHT
0

PACKAGING WIDTH
0

PACKAGING LENGTH
0

PACKAGING MEASUREMENT UNIT
MMT

PACKAGING VOLUME
0

PACKAGING VOLUME UNIT
MMQ

PACKAGING GROSS WEIGHT
0

PACKAGING NET WEIGHT
0

PACKAGING WEIGHT UNIT
KGM

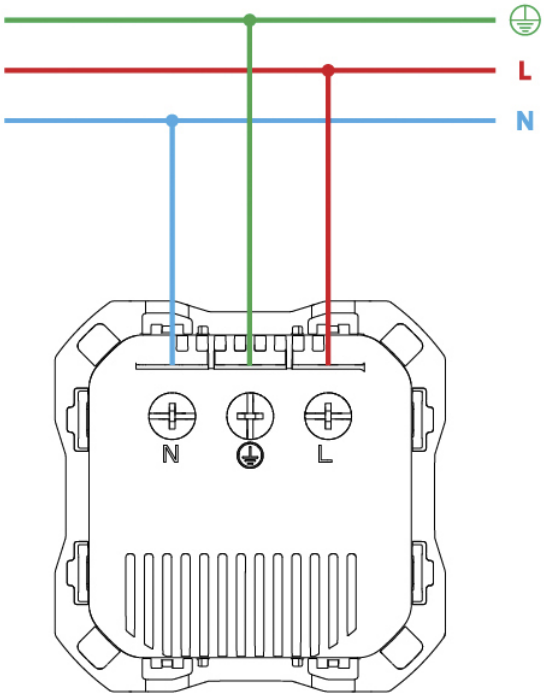
L
N
N
L

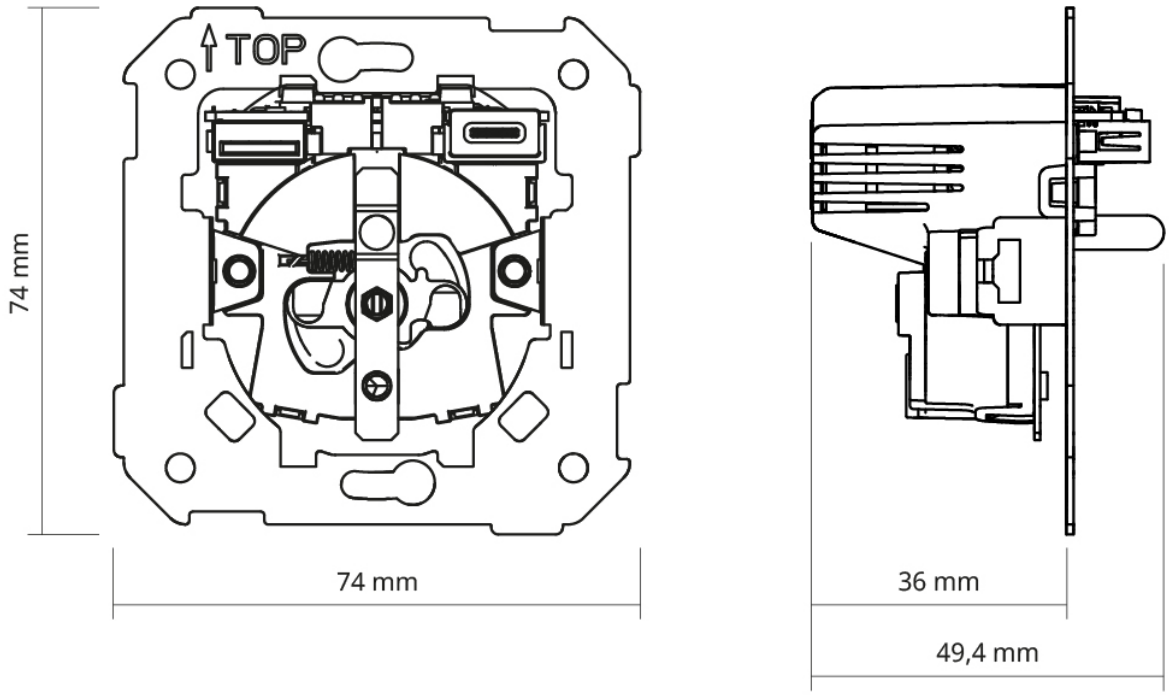
TOP
74 mm
74 mm
36 mm
49,4 mm