simon

Coaxial TV socket ivory Simon 25 Plus

REF. **25476-31**

BASIC INFORMATION

FINISH
Ivory

TECHNICAL INFORMATION

CABLE SECTION ADMITTED (MM)
3,3 mm

CONNECTOR TYPE
TV

FORMAT
TV

MAINTENANCE
Clean with a soft, dry cloth. Do not use abrasive cloths or cleaning products that contain chlorine.

simon

INSTALLATION AND MAINTENANCE

CABLE STRIPPING NECESSARY (MM)
11

TYPE OF TERMINAL CONNECTION - FUNCTION 1
Screw

LOGISTICS INFORMATION

UNITARY PACKAGING HEIGHT
22.2

UNITARY PACKAGING WIDTH
25.8

UNITARY PACKAGING LENGTH
41.2

UNITARY PACKAGING MEASUREMENT UNIT
MMT

UNITARY PACKAGING VOLUME
0.024

UNITARY PACKAGING VOLUME UNIT
DMQ

UNITARY PACKAGING GROSS WEIGHT
14.81

PRODUCT NET WEIGHT
12

UNITARY PACKAGING WEIGHT UNIT
GRM

PACKAGING EAN
7506020300111

UNITS CONTAINED PACKAGING
20

PACKAGING HEIGHT
45

PACKAGING WIDTH
85

PACKAGING LENGTH
224

PACKAGING MEASUREMENT UNIT
MMT

PACKAGING VOLUME
0.857

PACKAGING VOLUME UNIT
DMQ

PACKAGING GROSS WEIGHT
0.28

PACKAGING NET WEIGHT
240

PACKAGING WEIGHT UNIT
KGM

VISTA FRONTAL E ISOMÉTRICA DEL PRODUCTO

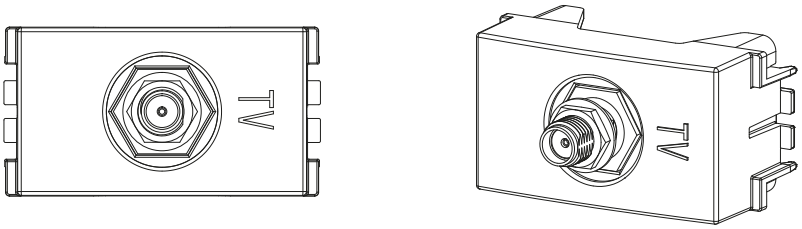

DIAGRAMA DE MONTAJE

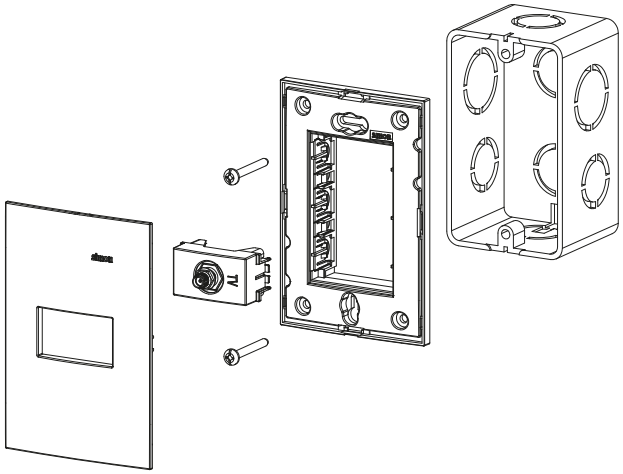

*Placa y chasis NO incluidos