# Schuko socket base with double USB C + C charger 20W Simon 75

REF. **7541432-039**

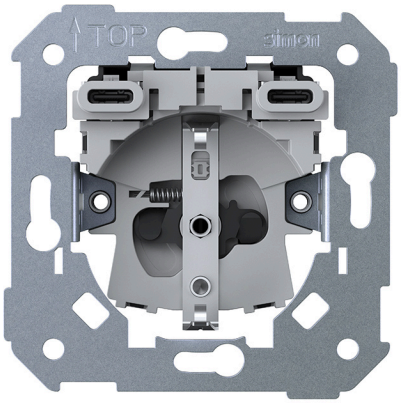

## BASIC INFORMATION

### DESCRIPTION

Schuko socket base with built-in double USB type C+C charger, ideal for combining power socket and fast charging of electronic devices in a single mechanism. This schuko socket with USB C allows you to power electrical equipment and directly charge smartphones, tablets, and devices compatible with Power Delivery (PD) without the need for additional adapters. It incorporates a schuko socket 16 A 250 V~ 50-60 Hz and two USB type C ports with output 5, 9, 12, 15, and 20 Vdc, offering optimized charging according to the profile of the connected device. Perfect solution as a flush-mounted socket with USB charger in residences, offices, hotels, and commercial spaces where modern and functional charging points are required. Connection system via terminal connection to screw, allowing conductor cross-section from 1.5 to 2.5 $mm^2$. Mechanism is flush-mounted in a universal box occupying 1 double element, suitable for surface or flush installation in a horizontal position. Protection rating IP20 and dielectric strength 3750 Vac. Operating temperature range from 0 to 35 °C. Aesthetically and mechanically compatible with the Simon 75 series and compatible frames, allowing integration of a USB type C socket of professional design in any electrical project.

### MATERIAL

Plastic,Metal

### COMPATIBILITY

Marcos Simon 82 Detail, Simon 82 Nature, Simon 82 Concept and Simon 82

### ETIM CLASS

EC000125

### REMARKS

The mechanism includes the child protection function.

## TECHNICAL INFORMATION

**NUMBER OF CONNECTORS**
2

**CONNECTOR TYPE**
Schuko,USB C

**NUMBER OF CONTACTS**
3

**FORMAT**
Schuko,USB C

**FREQUENCY**
50 - 60 Hz

**INDICATOR FUNCTION**
No

**CURRENT (A)**
16 A

**IP RATING**
IP20

**LINKABLE**
Yes

**MAXIMUM POWER (W)**
4000

**MONOBLOCK**
No

**NOMINAL VOLTAGE (V~)**
230 V~

**PLATE TYPE**
Flat

**RECESS DIMENSION (MM)**
45

**USB CHARACTERISTICS**
2 USB = 5,0 VDC 3,0 A 15,0 W ; 1 USB = 5,0 VDC 3,0 A 15,0 W / 9,0 VDC 2,2 A 19,8 W / 12,0 VDC 1,7 A 20,4 W

**USB CURRENT (A)**
1,6 A

**USB PORT TYPE**
C

**POWER DELIVERY USB**
Yes

**QUICK CHARGE USB**
Yes

**USB VOLTAGE (V~)**
5/12 V~

**VOLTAGE (V~)**
230 V~

**NUMBER OF WIRES**
3

## INSTALLATION AND MAINTENANCE

**CABLE STRIPPING NECESSARY (MM)**
10

**CLAW**
Simon 75

**REMOVAL OF COVER**
Only with tool

**TYPE OF TERMINAL CONNECTION - FUNCTION 1**
Screw

**TYPE OF TERMINAL CONNECTION - FUNCTION 2**
Schuko/USB: Screw

## LOGISTICS INFORMATION

UNITARY EAN CODE
8421053438824

UNITARY PACKAGING HEIGHT
0

UNITARY PACKAGING WIDTH
0

UNITARY PACKAGING LENGTH
0

UNITARY PACKAGING MEASUREMENT UNIT
MMT

UNITARY PACKAGING VOLUME
0

UNITARY PACKAGING VOLUME UNIT
MMQ

UNITARY PACKAGING GROSS WEIGHT
0.1

PRODUCT NET WEIGHT
0.08

UNITARY PACKAGING WEIGHT UNIT
KGM

PACKAGING EAN
8421053438824

UNITS CONTAINED PACKAGING
1

PACKAGING HEIGHT
57

PACKAGING WIDTH
76

PACKAGING LENGTH
76

PACKAGING MEASUREMENT UNIT
MMT

PACKAGING VOLUME
329232

PACKAGING VOLUME UNIT
MMQ

PACKAGING GROSS WEIGHT
0.104

PACKAGING NET WEIGHT
0.08

PACKAGING WEIGHT UNIT
KGM

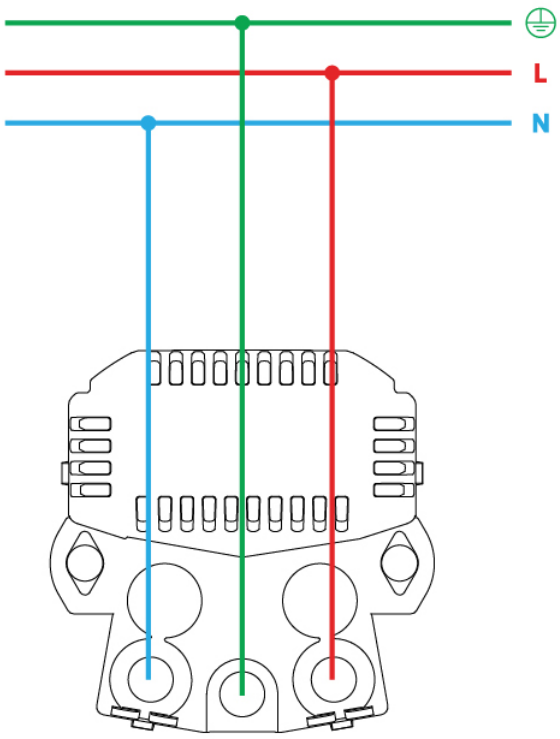
L
N

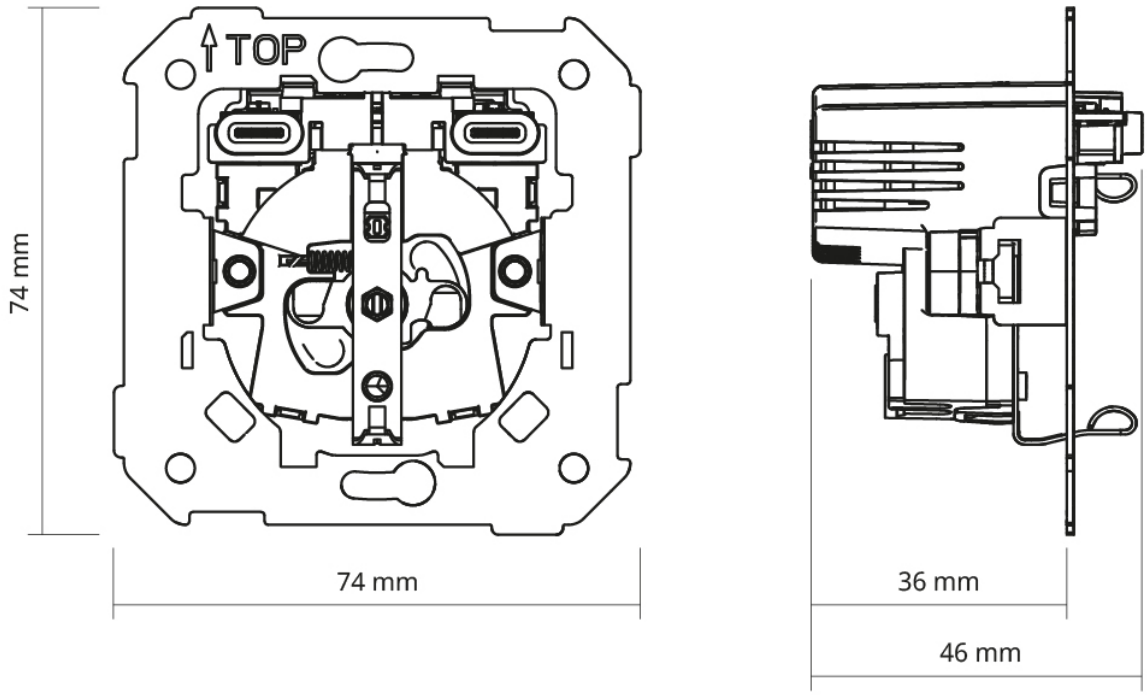
TOP
74 mm
74 mm
36 mm
46 mm