Double push button with light indicator 10A 250V~ with quick terminal connection Simon 360

REF. **36010393-039**

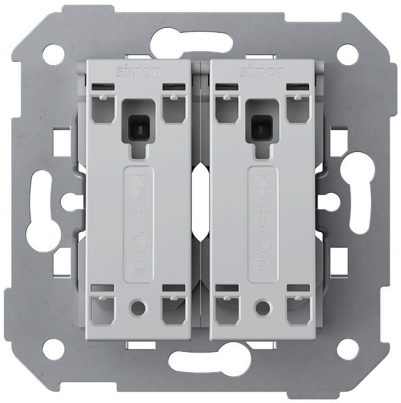

BASIC INFORMATION

DESCRIPTION

Double push button with light indicator 10A 250V~ with quick terminal connection system from the Simon 360 series. The push mechanism allows all keys to always be aligned in any configuration. Pleasure to the touch, sound, and visual balance.

MATERIAL

Plastic,Metal

COMPATIBILITY

Molduras Simon 360

ETIM CLASS

EC000029

TECHNICAL INFORMATION

NUMBER OF CONTACTS
6

CURRENT (A)
10 A

RECESS DIMENSION (MM)
40

FORMAT
Push-button

IP RATING
IP20

VOLTAGE (V~)
127/230 V~

FREQUENCY
50 - 60 Hz

NOMINAL VOLTAGE (V~)
250 V~

NUMBER OF WIRES
6

INDICATOR FUNCTION
Yes

POWER SUPPLY (V~)
127/230 V~

INSTALLATION AND MAINTENANCE

CABLE STRIPPING NECESSARY (MM)
15

REMOVAL OF COVER
Only with tool

TYPE OF TERMINAL CONNECTION - FUNCTION 1
Fast

CLAW
Simon 27

INSTALLATION DIRECTION
Horizontal, Vertical

LOGISTICS INFORMATION

UNITARY EAN CODE
8421053441893

UNITARY PACKAGING HEIGHT
0

UNITARY PACKAGING WIDTH
0

UNITARY PACKAGING LENGTH
0

UNITARY PACKAGING MEASUREMENT UNIT
MMT

UNITARY PACKAGING VOLUME
0

UNITARY PACKAGING VOLUME UNIT
MMQ

UNITARY PACKAGING GROSS WEIGHT
0.07

PRODUCT NET WEIGHT
0.06

UNITARY PACKAGING WEIGHT UNIT
KGM

PACKAGING EAN
8421053441909

UNITS CONTAINED PACKAGING
10

PACKAGING HEIGHT
85

PACKAGING WIDTH
85

PACKAGING LENGTH
220

PACKAGING MEASUREMENT UNIT
MMT

PACKAGING VOLUME
1589500

PACKAGING VOLUME UNIT
MMQ

PACKAGING GROSS WEIGHT
0.8

PACKAGING NET WEIGHT
0.63

PACKAGING WEIGHT UNIT
KGM

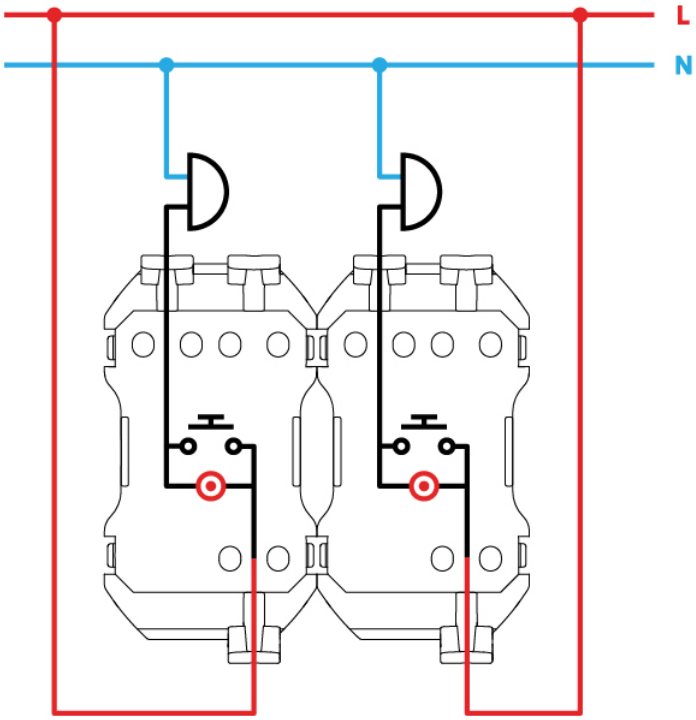
L
N

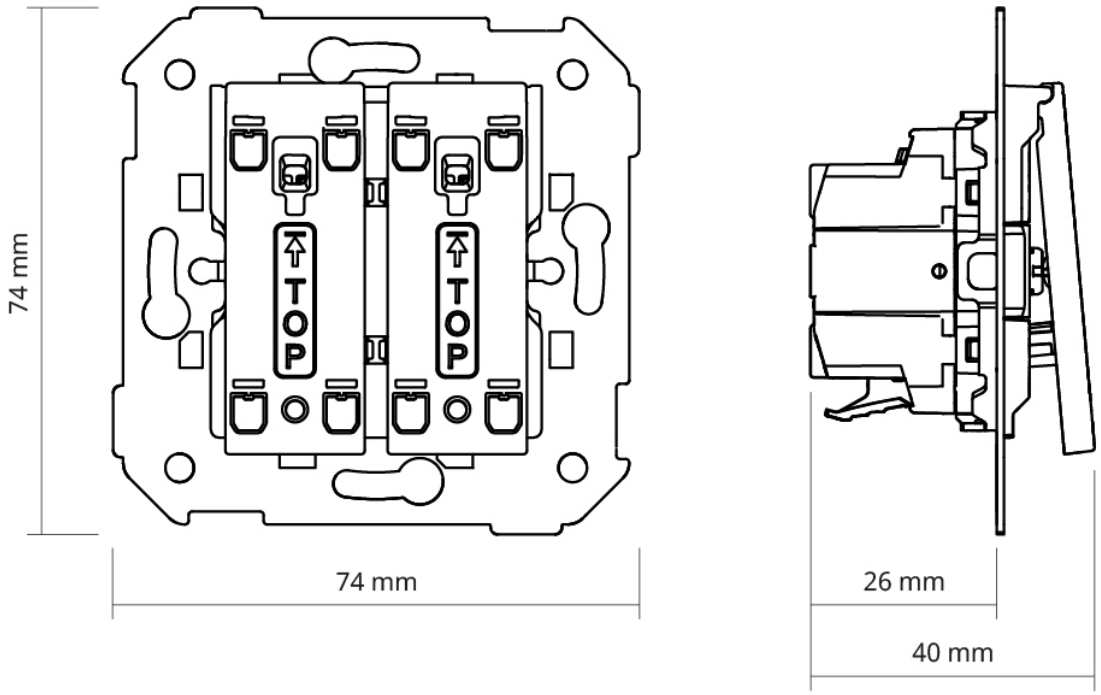
74 mm
TOP
TOP
74 mm
26 mm
40 mm