Cover for 2 x RJ45 without connector without adapter sand matte Simon 360

REF. **36000088-099**

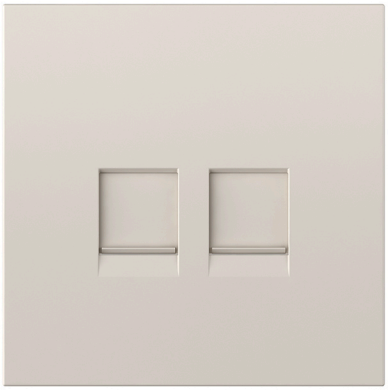

BASIC INFORMATION

DESCRIPTION

Cover for 2 x RJ45 without connector without adapter in sand finish from the Simon 360 series. The matte finish, in addition to being trendy and integrating into any environment, avoids light reflections and reduces maintenance by minimizing stains and fingerprints. Soft, high-quality feel that provides a sense of sophisticated product in all colors of the series. Urea is the main material and has high resistance and durability, ensuring a long service life. Cover designed for installation in Simon 75 mechanisms.

FINISH

Sand

COMPATIBILITY

Molduras Simon 360

MATERIAL

Thermoplastic,Steel

ETIM CLASS

EC000018

REMARKS

Available in 3 matte finishes s360. Frame available in the same color as the selected interior to create a single-color set or the possibility of a bicolor set. For cleaning, it is recommended to use a cloth slightly dampened with soapy water, avoiding the use of abrasive cloths or cleaners containing chlorine, to prevent damage to the product's surface.

TECHNICAL INFORMATION

FORMAT
RJ45

IP RATING
IP20

RAL
7044

INDICATOR FUNCTION
No

MAINTENANCE
Clean with a soft, dry cloth. Do not use abrasive cloths or cleaning products that contain chlorine.

INSTALLATION AND MAINTENANCE

REMOVAL OF COVER
Only with tool

INSTALLATION DIRECTION
Horizontal, Vertical

LOGISTICS INFORMATION

UNITARY EAN CODE
8421053440926

UNITARY PACKAGING HEIGHT
0

UNITARY PACKAGING WIDTH
0

UNITARY PACKAGING LENGTH
0

UNITARY PACKAGING MEASUREMENT UNIT
MMT

UNITARY PACKAGING VOLUME
0

UNITARY PACKAGING VOLUME UNIT
MMQ

UNITARY PACKAGING GROSS WEIGHT
0.023

PRODUCT NET WEIGHT
0.018

UNITARY PACKAGING WEIGHT UNIT
KGM

PACKAGING EAN
8421053440933

UNITS CONTAINED PACKAGING
5

PACKAGING HEIGHT
80

PACKAGING WIDTH
80

PACKAGING LENGTH
90

PACKAGING MEASUREMENT UNIT
MMT

PACKAGING VOLUME
576000

PACKAGING VOLUME UNIT
MMQ

PACKAGING GROSS WEIGHT
0.108

PACKAGING NET WEIGHT
0.09

PACKAGING WEIGHT UNIT
KGM

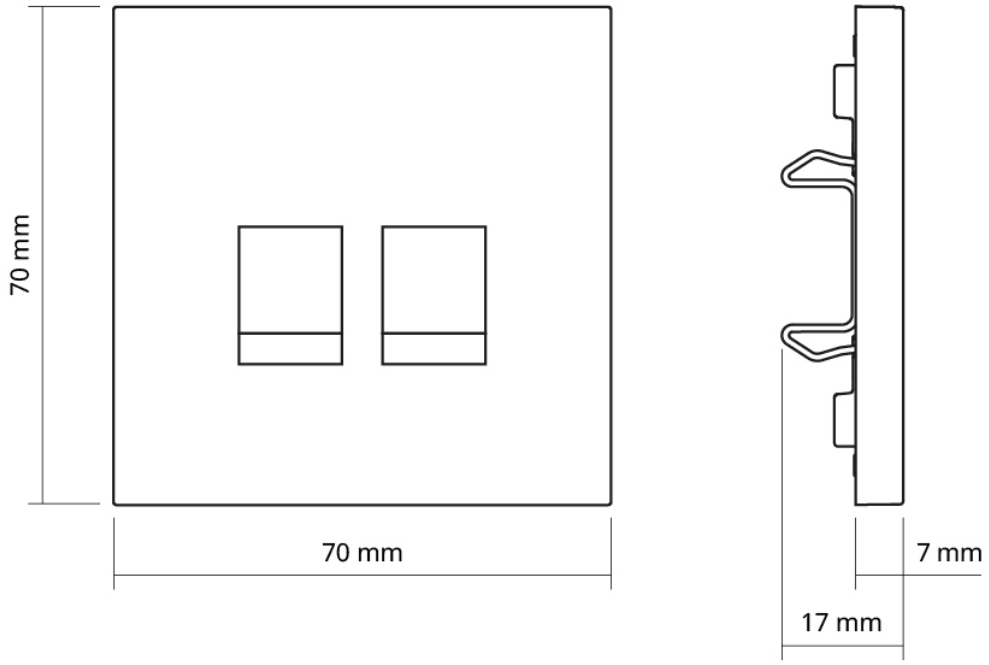
70 mm
70 mm
7 mm
17 mm