Cover for schuko socket CLEAN modular matte black Simon 360

REF. **36000435-098**

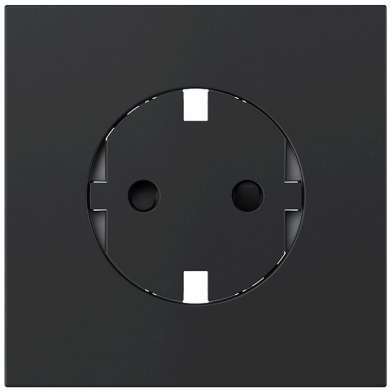

BASIC INFORMATION

DESCRIPTION

Cover for schuko socket CLEAN modular in black finish from the Simon 360 series. The matte finish, in addition to being trendy and integrating into any environment, avoids light reflections and decreases maintenance by reducing stains and fingerprints. Soft and high-quality touch that provides a sense of a sophisticated product in all colors of the series. Urea is the main material and has high resistance and durability, ensuring a prolonged useful life. Cover designed for installation in Simon 75 mechanisms.

FINISH

Matt black

COMPATIBILITY

Molduras Simon 360

MATERIAL

Steel,Thermostable

ETIM CLASS

EC000011

REMARKS

Available in 3 matte finishes s360. Frame available in the same color as the selected interior to create a single-color set or the possibility of a bicolor set. For cleaning, it is recommended to use a cloth slightly dampened with soapy water, avoiding the use of abrasive cloths or cleaners containing chlorine, to prevent damage to the product's surface.

TECHNICAL INFORMATION

FORMAT
Schuko

IP RATING
IP20

RAL
9005

INDICATOR FUNCTION
No

MAINTENANCE
Clean with a soft, dry cloth. Do not use abrasive cloths or cleaning products that contain chlorine.

INSTALLATION AND MAINTENANCE

REMOVAL OF COVER
Only with tool

INSTALLATION DIRECTION
Horizontal, Vertical

LOGISTICS INFORMATION

UNITARY EAN CODE
8421053437667

UNITARY PACKAGING HEIGHT
80

UNITARY PACKAGING WIDTH
80

UNITARY PACKAGING LENGTH
40

UNITARY PACKAGING MEASUREMENT UNIT
MMT

UNITARY PACKAGING VOLUME
256000

UNITARY PACKAGING VOLUME UNIT
MMQ

UNITARY PACKAGING GROSS WEIGHT
0.05

PRODUCT NET WEIGHT
0.05

UNITARY PACKAGING WEIGHT UNIT
KGM

PACKAGING EAN
8421053434550

UNITS CONTAINED PACKAGING
10

PACKAGING HEIGHT
90

PACKAGING WIDTH
165

PACKAGING LENGTH
225

PACKAGING MEASUREMENT UNIT
MMT

PACKAGING VOLUME
3341250

PACKAGING VOLUME UNIT
MMQ

PACKAGING GROSS WEIGHT
0.474

PACKAGING NET WEIGHT
0.48

PACKAGING WEIGHT UNIT
KGM

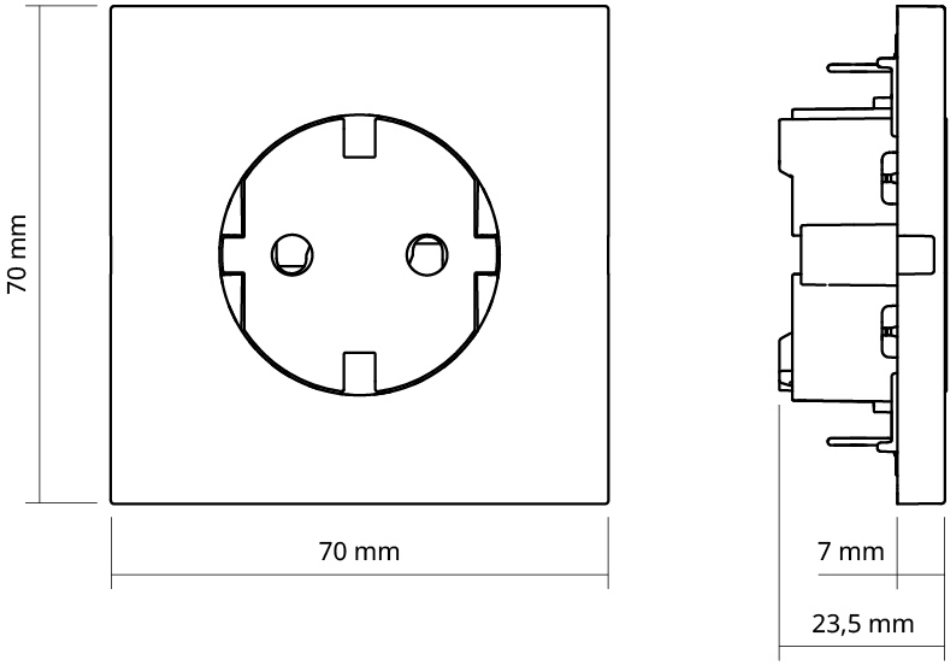
70 mm
70 mm
7 mm
23,5 mm