R-TV+SAT signal socket non-modular final Simon 75

REF. **75488-39**

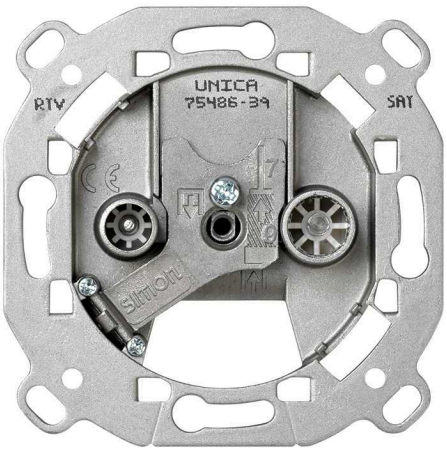

BASIC INFORMATION

DESCRIPTION

R-TV+SAT non-modular signal socket Simon 75, designed for the efficient distribution of radio, terrestrial television, and satellite signals as the final point in individual installations. A reliable solution for residential and professional environments that require transmission quality. Based on 9.5 mm Ø IEC connectors, with a screw terminal connection system and push-fit operation, it ensures a stable and secure connection. It supports coaxial cable from 6 to 8 mm with 7 mm stripping, facilitating a precise and professional installation. Manufactured with metallic components and halogen-free thermoplastic insulation, in accordance with UNE-EN 50083-2:2013 standards, it combines technical performance, durability, and an aesthetic integration consistent with compatible Simon series.

MATERIAL

Plastic,Metal

COMPATIBILITY

Marcos Simon 27 Play, Simon 27 Scudo, Simon 27, Simon 31, Simon 44 Aqua, Simon 75, Simon 82 Detail, Simon 82 Nature, Simon 82 Concept and Simon 82.

PACKAGING CONTENTS

R/TV socket and instruction sheet

ETIM CLASS

EC000439

TECHNICAL INFORMATION

AVAILABLE MARKET
CE

CABLE SECTION ADMITTED (MM)
From 6 to 8 mm

NUMBER OF CONNECTORS
2

CONNECTOR TYPE
IEC

NUMBER OF CONTACTS
2

NUMBER OF POSSIBLE ELEMENTS
1 element

FORMAT
R/TV,SAT

IP RATING
IP20

LINKABLE
No

TYPE OF MECHANISM
Multimedia

OPERATING TEMPERATURE RANGE (°C)
5 - 40 °C

RECESS DIMENSION (MM)
35

STORAGE TEMPERATURE RANGE (°C)
-25 - 50 °C

VERSION
Single

NUMBER OF WIRES
1

INSTALLATION AND MAINTENANCE

CABLE STRIPPING NECESSARY (MM)
7

CLAW
Included

REMOVAL OF COVER
Only with tool

INSTALLABLE IN FLUSH MOUNT JUNCTION BOX
Universal

INSTALLATION DIRECTION
Horizontal, Vertical

INSTALLATION TYPE
Suitable for surface and flush mounting

TYPE OF TERMINAL CONNECTION - FUNCTION 1
Screw

REGULATIONS

REGULATIONS
UNE-EN 50083-2:2013

LOGISTICS INFORMATION

UNITARY EAN CODE
8421053256312

UNITARY PACKAGING HEIGHT
0

UNITARY PACKAGING WIDTH
0

UNITARY PACKAGING LENGTH
0

UNITARY PACKAGING MEASUREMENT UNIT
MMT

UNITARY PACKAGING VOLUME
0

UNITARY PACKAGING VOLUME UNIT
MMQ

UNITARY PACKAGING GROSS WEIGHT
0.101

PRODUCT NET WEIGHT
0.101

UNITARY PACKAGING WEIGHT UNIT
KGM

PACKAGING EAN
8421053024980

UNITS CONTAINED PACKAGING
10

PACKAGING HEIGHT
82

PACKAGING WIDTH
165

PACKAGING LENGTH
221

PACKAGING MEASUREMENT UNIT
MMT

PACKAGING VOLUME
2990130

PACKAGING VOLUME UNIT
MMQ

PACKAGING GROSS WEIGHT
1.105

PACKAGING NET WEIGHT
1.01

PACKAGING WEIGHT UNIT
KGM

INTERMEDIA

75487-39
75467-69

FINAL

75488-39
75468-69

UNICA

7500470-039
75486-39
75466-69

En Serie/Cascada

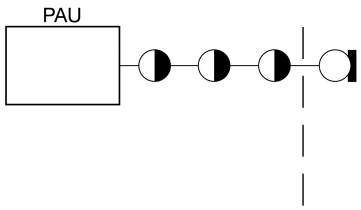

En Estrella

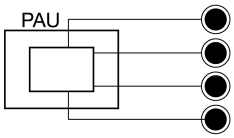

1

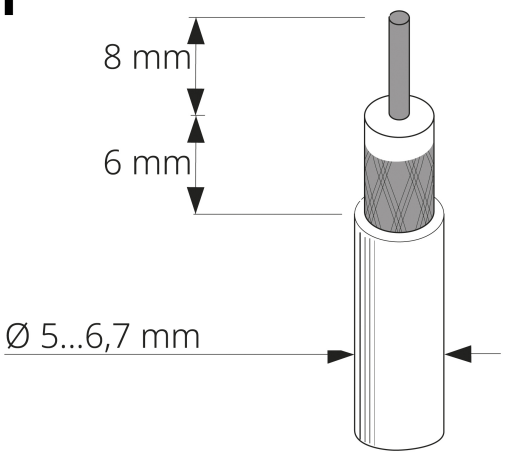

2

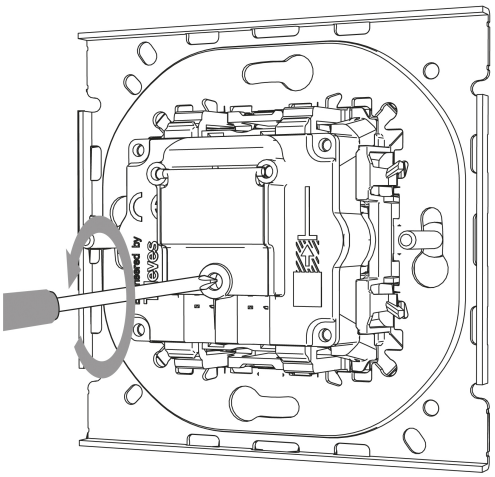

3

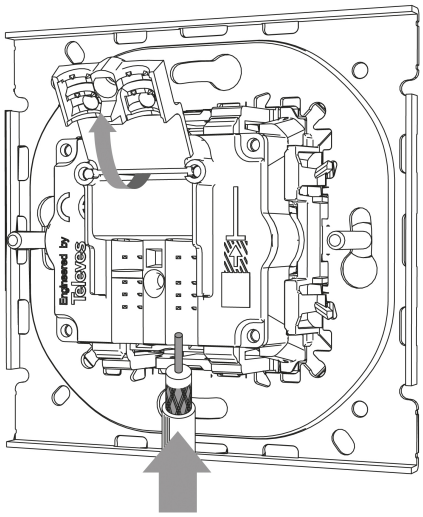

4

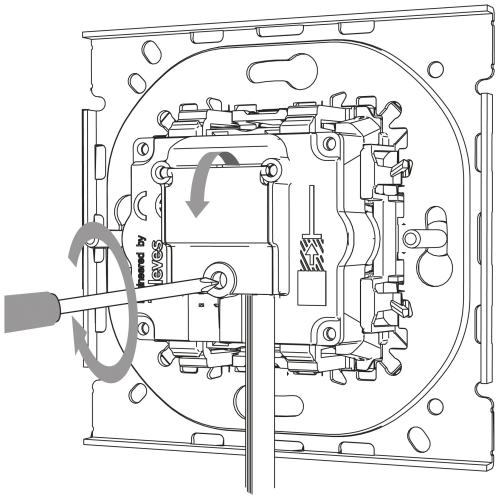

Para información más detallada consultar la hoja de instrucciones
For more detailed information check the instruction sheet

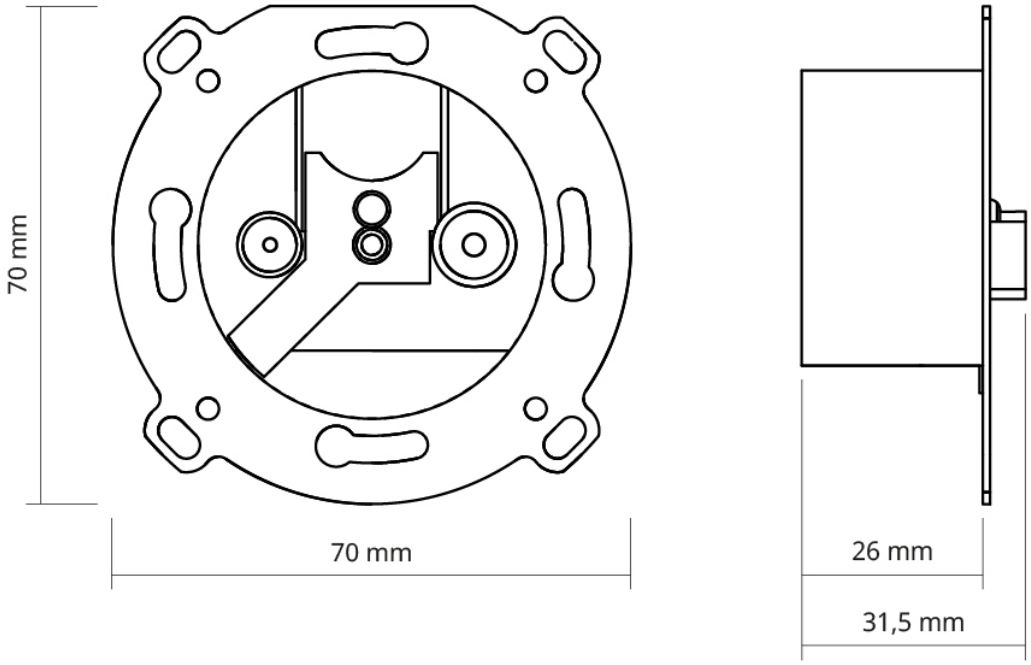
70 mm
70 mm
26 mm
31,5 mm