Cover for French socket + 2USB C+C black matte Simon 360

REF. **36000170-098**

BASIC INFORMATION

DESCRIPTION

Cover for French socket + 2USB C+C in black finish from the Simon 360 series. The matte finish, in addition to being trendy and integrating into any environment, prevents light reflections and reduces maintenance by minimizing stains and fingerprints. Smooth and high-quality touch that provides a sophisticated product feel in all the colors of the series. Urea is the main material and has high resistance and durability, ensuring prolonged lifespan. Cover designed for installation in Simon 75 mechanisms.

FINISH

Matt black

MATERIAL

Steel,Thermostable

ETIM CLASS

EC000011

REMARKS

Available in 3 matte finishes s360. Frame available in the same colour as the selected interior to create a monochrome set or a two-tone combination. For cleaning, use a cloth slightly dampened with soapy water. Avoid abrasive cloths or cleaners containing chlorine to prevent damage to the product surface.

TECHNICAL INFORMATION

AVAILABLE MARKET
CE

FORMAT
Schuko,USB C

IP RATING
IP20

MAINTENANCE
Clean with a soft, dry cloth. Do not use abrasive cloths or cleaning products that contain chlorine.

OPERATING TEMPERATURE RANGE (ºC)
+5...+40

RAL
9005

STORAGE TEMPERATURE RANGE (ºC)
-25...+50

INSTALLATION AND MAINTENANCE

REMOVAL OF COVER
Only with tool

INSTALLATION DIRECTION
Horizontal

LOGISTICS INFORMATION

UNITARY EAN CODE
8421053463536

UNITARY PACKAGING HEIGHT
0

UNITARY PACKAGING WIDTH
0

UNITARY PACKAGING LENGTH
0

UNITARY PACKAGING VOLUME
0

UNITARY PACKAGING GROSS WEIGHT
0

PRODUCT NET WEIGHT
0

UNITARY PACKAGING WEIGHT UNIT
KGM

PACKAGING EAN
8421053453223

UNITS CONTAINED PACKAGING
5

PACKAGING HEIGHT
80

PACKAGING WIDTH
80

PACKAGING LENGTH
120

PACKAGING MEASUREMENT UNIT
MMT

PACKAGING VOLUME
768000

PACKAGING VOLUME UNIT
MMQ

PACKAGING GROSS WEIGHT
0.14

PACKAGING NET WEIGHT
0

PACKAGING WEIGHT UNIT
KGM

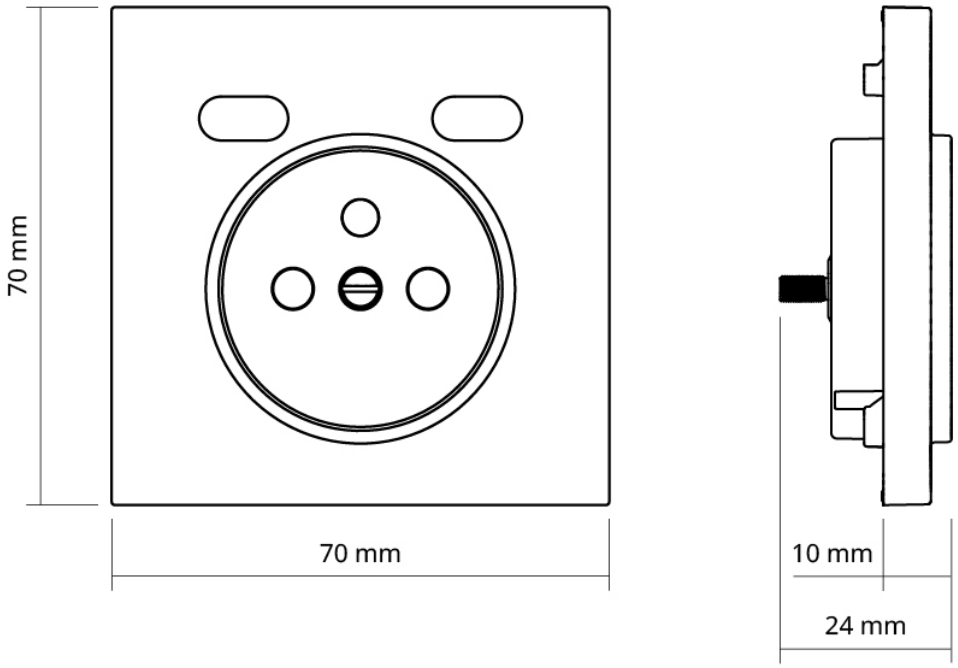
70 mm
70 mm
10 mm
24 mm