Kirk Sandall Industrial Estate, Doncaster, South Yorkshire, DN3 1QR

+44 (0)1302 310 113
enquiries@prosolveproducts.com
www. prosolveproducts.com

ProSolve is trademark of S.T.L Trading Company Limited
Reg in England No: 5230722
VAT Reg No: 381 3533 58

TECHNICAL DATA SHEET

ProSolve 56L Flexitub

DESCRIPTION

The ProSolve 26L flexible tub is made from heavy-duty, flexible recycled low-density polyethylene that bends but doesn't break.

It's perfect for carrying rubble, mixing plaster, hauling tools or storing just about anything on site.

Strong handles make it easy to lift and carry, even when it's full. Its compact 56-litre size makes it ideal for smaller jobs or tight spaces.

Weatherproof, frost-proof and built to handle rough conditions day after day. Ideal for construction sites, workshops, gardens or even around the house.

DIMENSIONS

Upper Diameter (A) 550 mm
Bottom Diameter (B) 445 mm
Height (C) 305 mm
Height with handle (D) 350 mm
Capacity 56L
Weight: 1.4kg



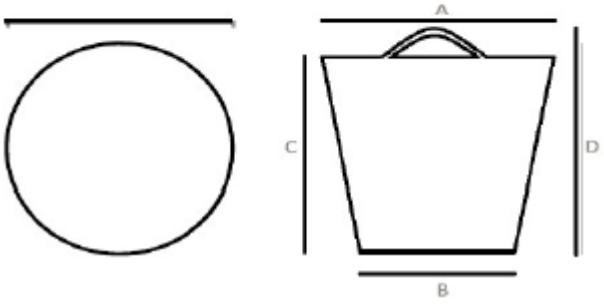

IMPORTANT NOTICE

All statements, technical information and recommendations are based on tests we believe to be reliable as at the date of hereof, but the accuracy or completeness thereof is not guaranteed. Please ensure before using the product that it is suitable for your intended use. Since the conditions and methods of use of the product and of the information referred to herein are beyond our control, other than for fraudulent misrepresentation, ProSolve expressly disclaims any and all liability as to any results obtained or arising from any use of the product or reliance on such information.

BEFORE USE, CONSULT THE SAFETY DATA SHEET OF THE PRODUCT.