Kirk Sandall Industrial Estate, Doncaster, South Yorkshire, DN3 1QR

+44 (0)1302 310 113
enquiries@prosolveproducts.com
www. prosolveproducts.com

ProSolve is trademark of S.T.L Trading Company Limited
Reg in England No: 5230722
VAT Reg No: 381 3533 58

DATASHEET

ProSolve Reinforced Brackets

These ProSolve Reinforced Brackets provide light to medium strength support.

Can be used with a wide range of shelf boards.

Codes:
DRB10, DRB15, DRB20, DRB25, DRB30



ProSolve Reinforced Brackets – Descriptions, Sizes and Weight Loadings

Code	Description	Max Load
DRB10	PROSOLVE WHITE REINFORCED BRKT 100MM X 75MM	43kg
DRB15	PROSOLVE WHITE REINFORCED BRKT 150MM X 120MM	40kg
DRB20	PROSOLVE WHITE REINFORCED BRKT 200MM X 150MM	44kg
DRB25	PROSOLVE WHITE REINFORCED BRKT 250MM X 200MM	59kg
DRB30	PROSOLVE WHITE REINFORCED BRKT 300MM X 250MM	

ProSolve Reinforced Brackets – Technical Drawings

DRB10

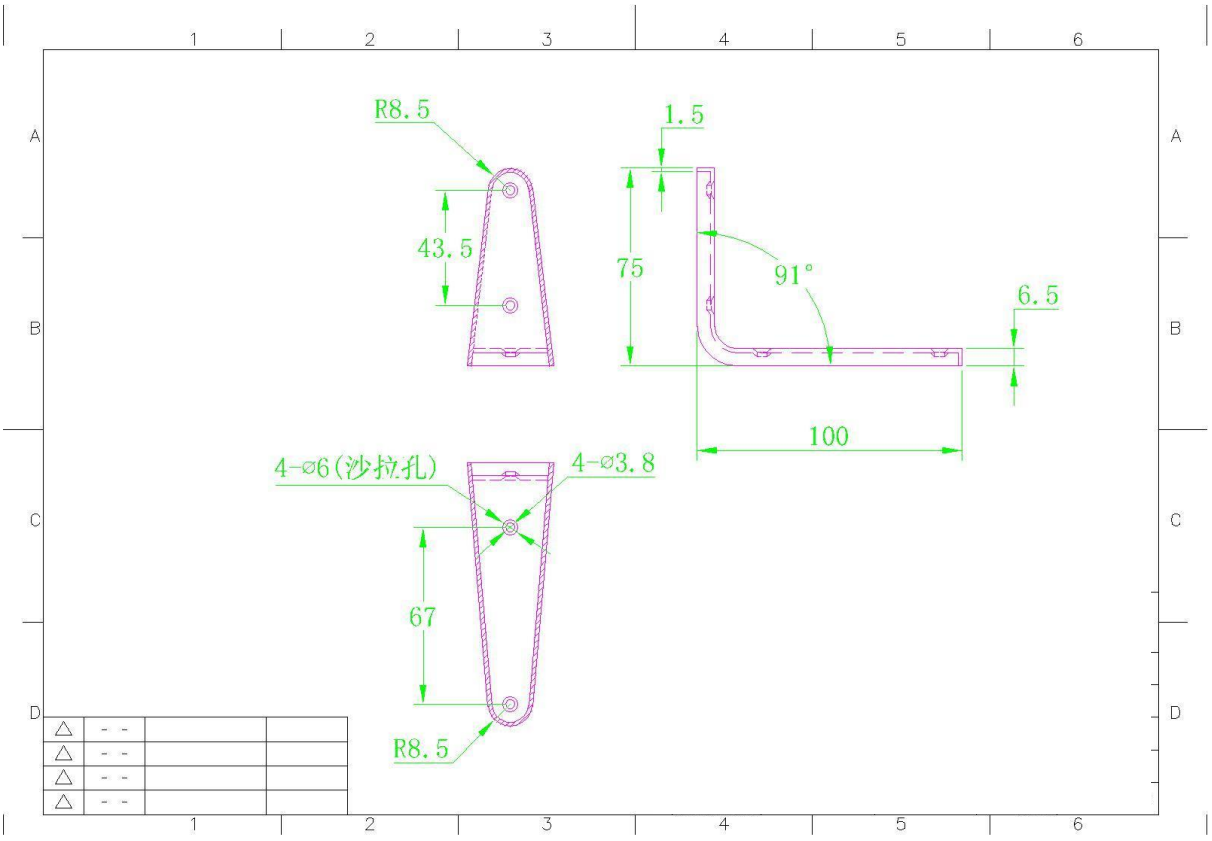

DRB15

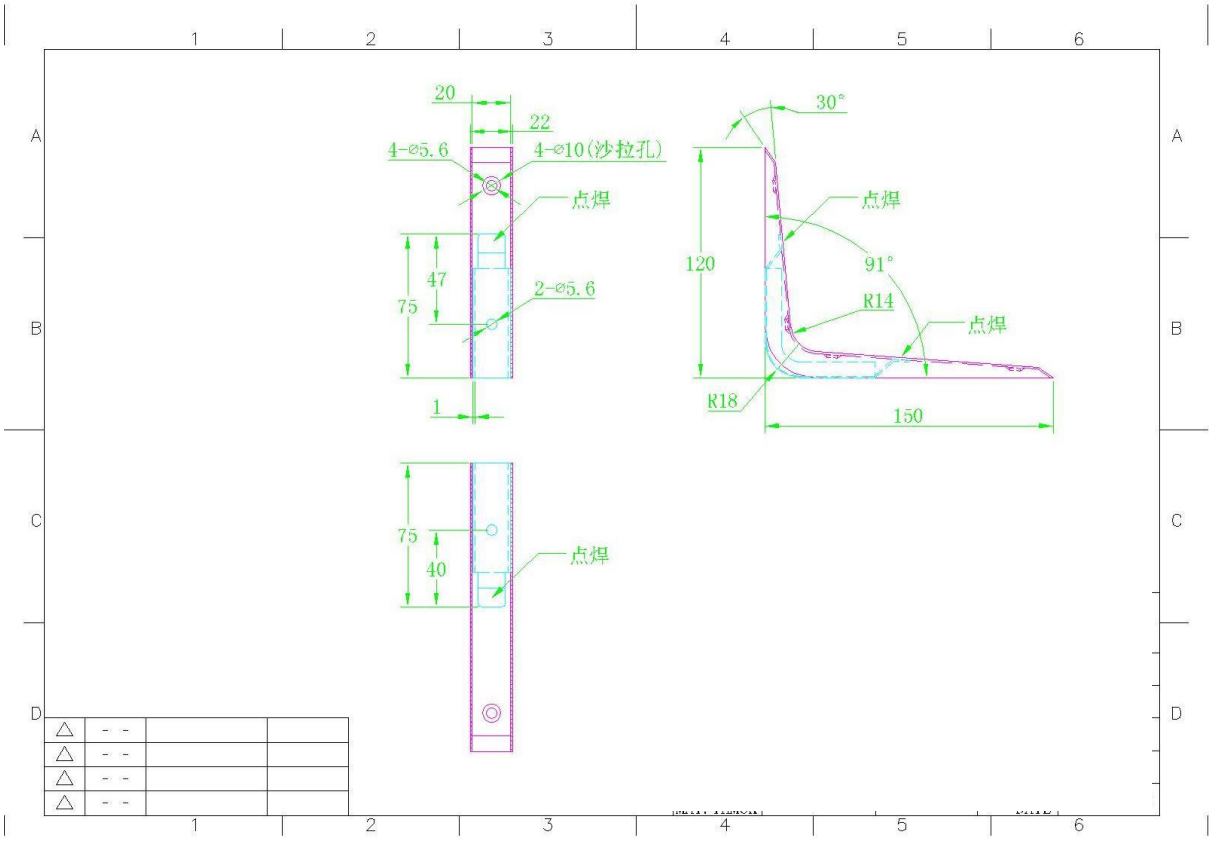

DRB20

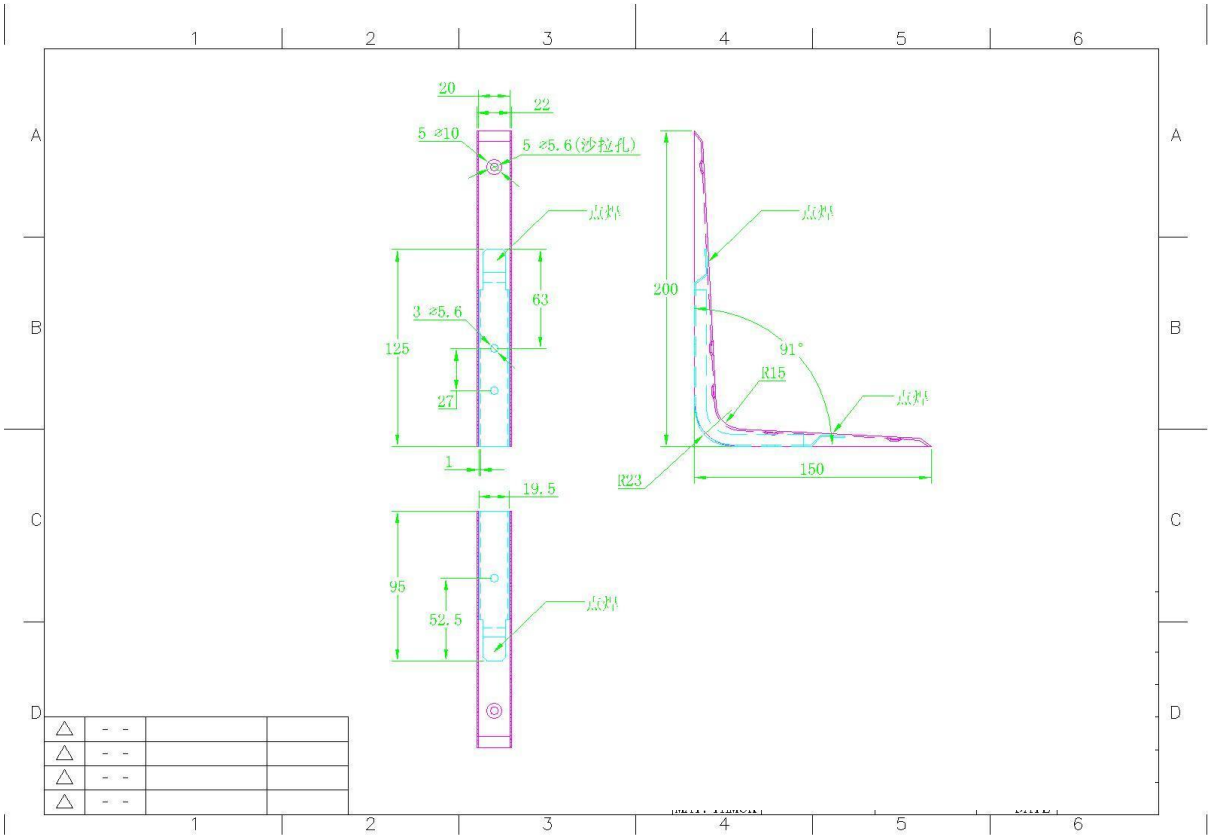

DRB25

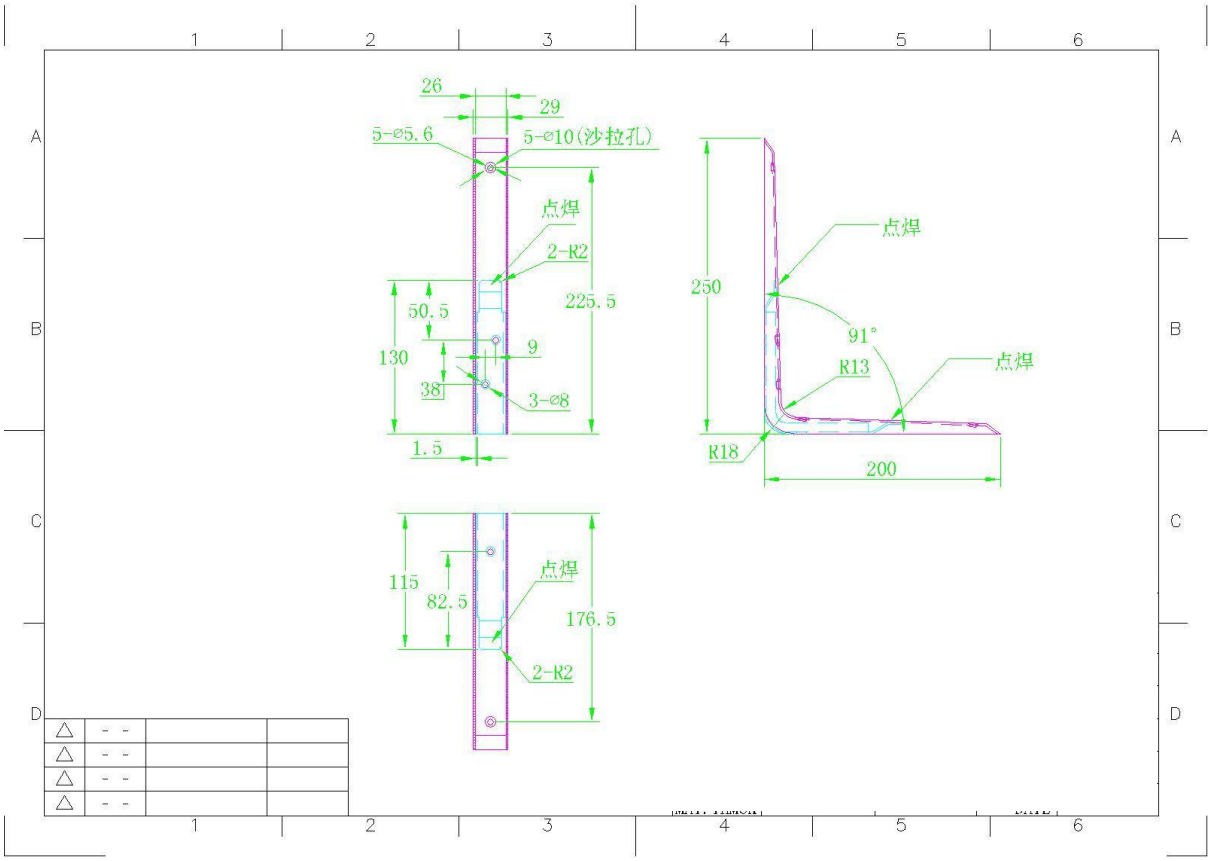
26
29
5-⌀5.6
5-⌀10(沙拉孔)
点焊
2-R2
50.5
225.5
130
9
38
3-⌀8
1.5
115
82.5
176.5
点焊
2-R2
250
点焊
91°
R13
点焊
R18
200