Eastbrook Road
Gloucester, GL4 3DB
01452 317800
www.eastbrooktrade.com

Eastbrook

DATASHEET

Image

Drawing

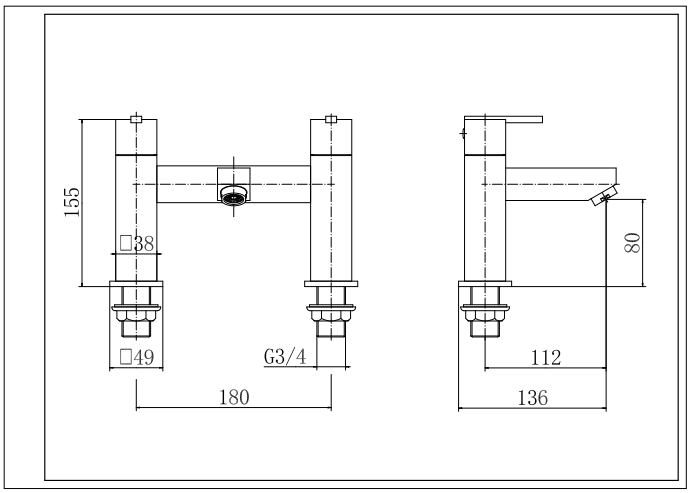

General Information

Product:	79.0071
Description:	Prado 600 Bath Filler
Website Link:	(Click Here)
Product Type:	Clearance Bath Taps
Brand:	Eastbrook Company
Colour:	Chrome
Material:	Solid Brass
Height (mm):	158mm
Width (mm):	146mm
Length (mm):	229mm
Net Weight (kg) (kg):	2.96kg
Product Range:	Prado 600

Product Specifications

Warranty:	5 Year(s)
Finish:	Polished
Mounting:	Deck
Flow rate Litres/Min (1.0 bar):	32.3
Flow rate Litres/Min (2.0 bar):	42.5
Flow rate Litres/Min (3.0 bar):	52.6
Minimum Bar Pressure re-	0.2