INSTALLATION MANUAL

Eastbrook Road, Gloucester GL4 3DB
Technical Helpline: 01452 317890
email: technical@eastbrookco.com

Eastbrook Code	Adjustment	Eastbrook Code	Adjustment
69.0060	865-900	69.0066	965-1000
69.0067	1165-1200		

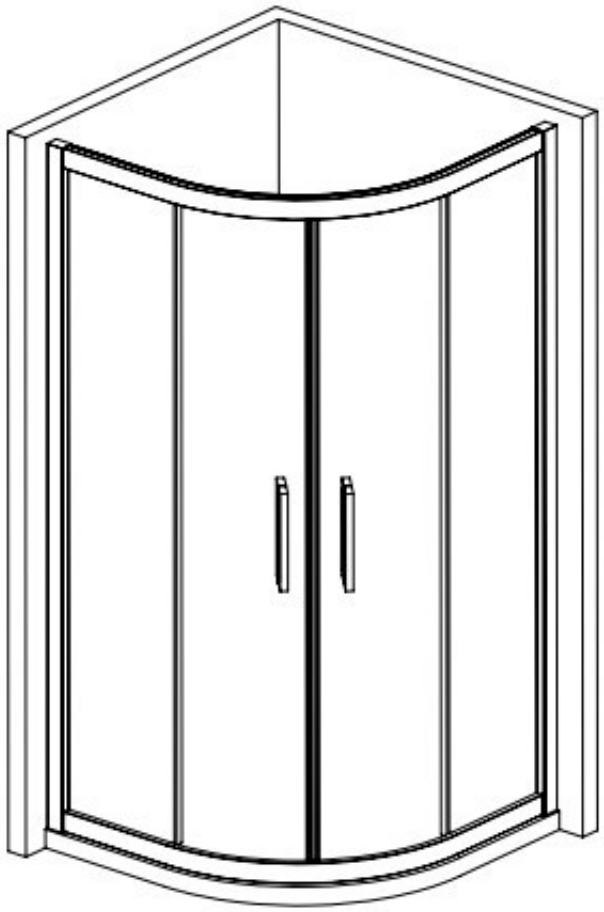

This product should only be fixed by a fully qualified installer

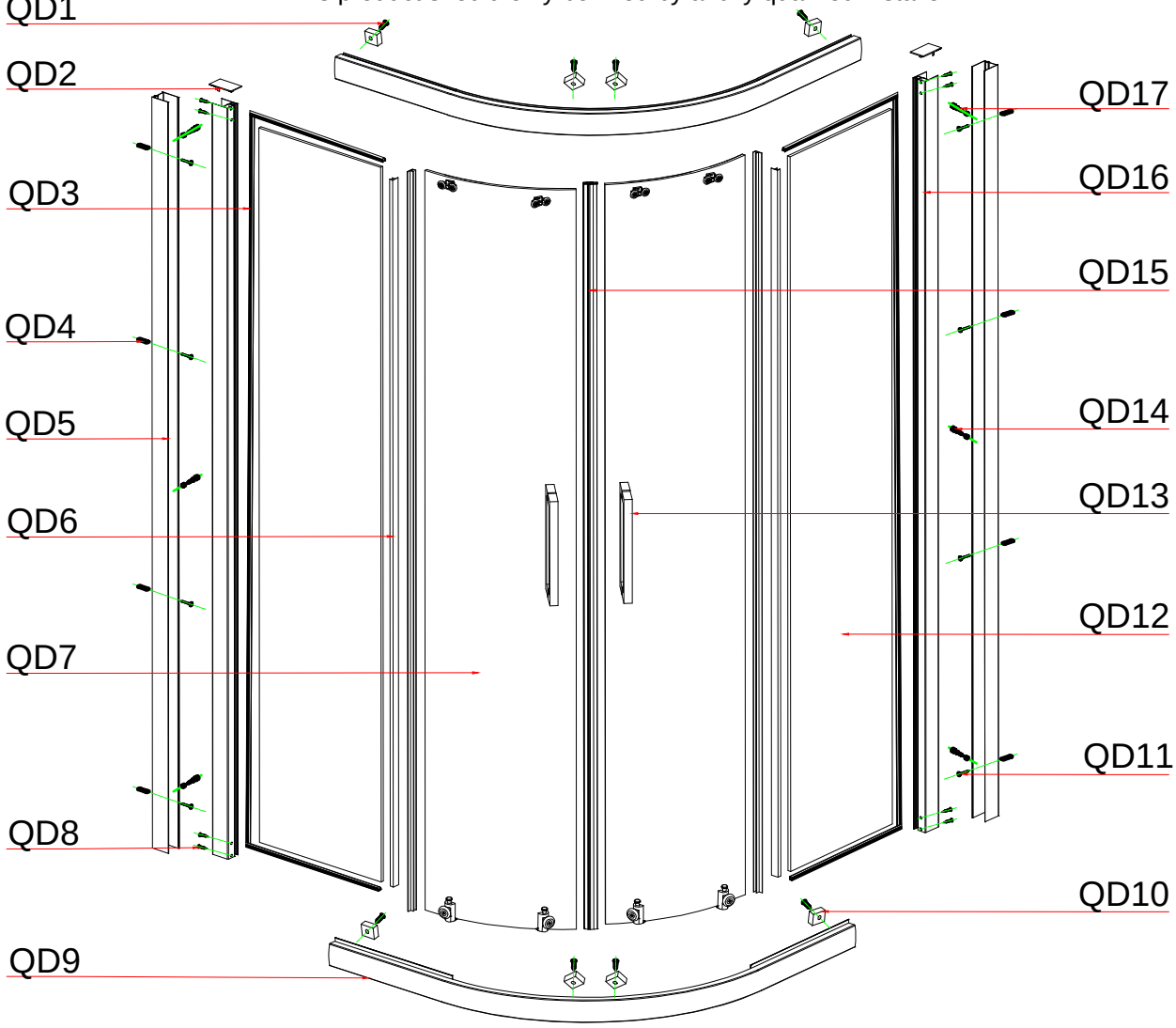

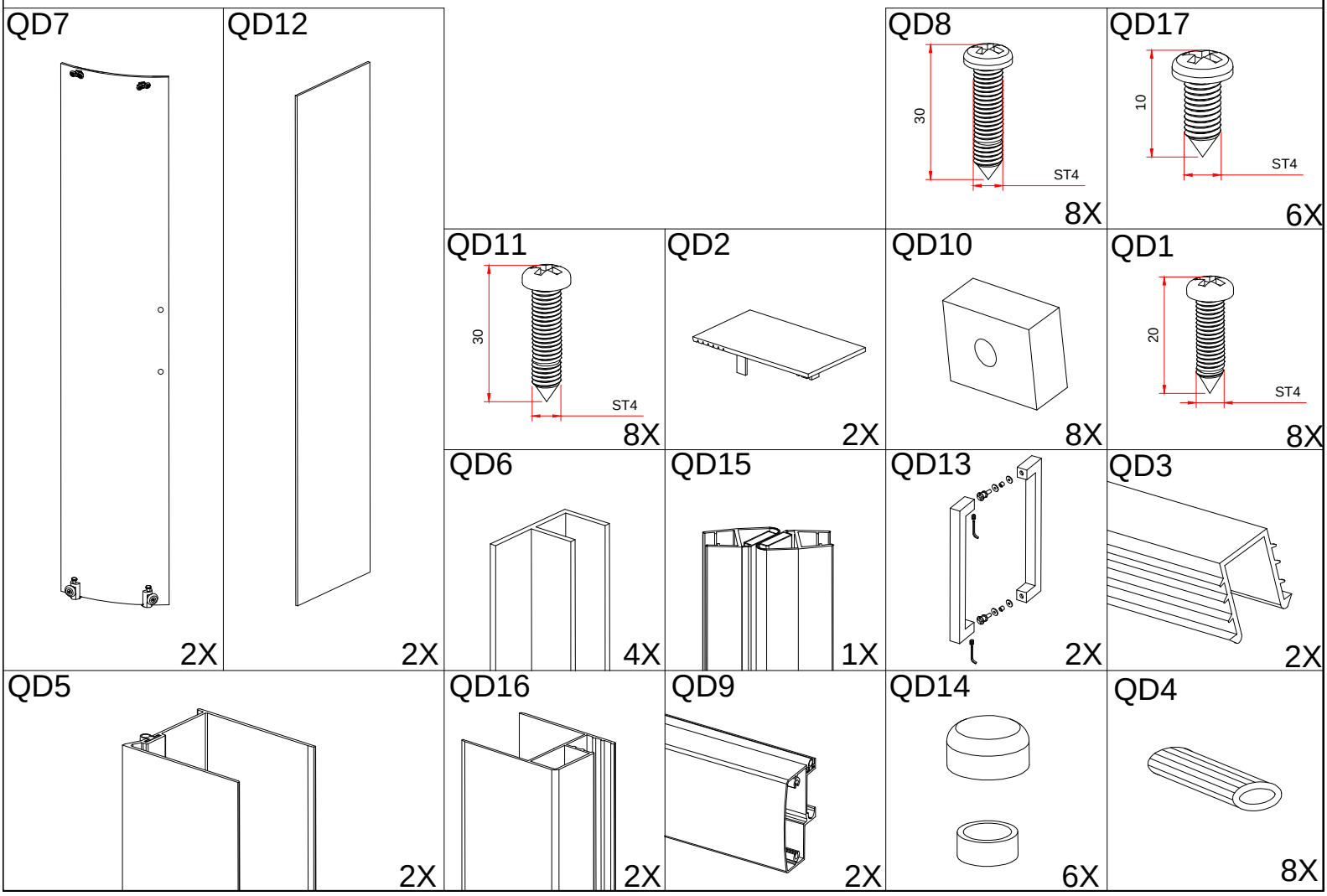

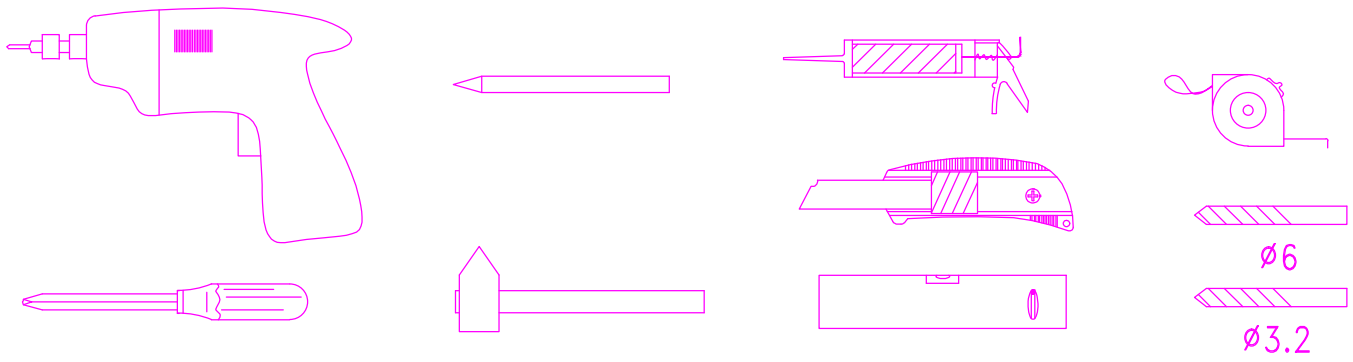

1

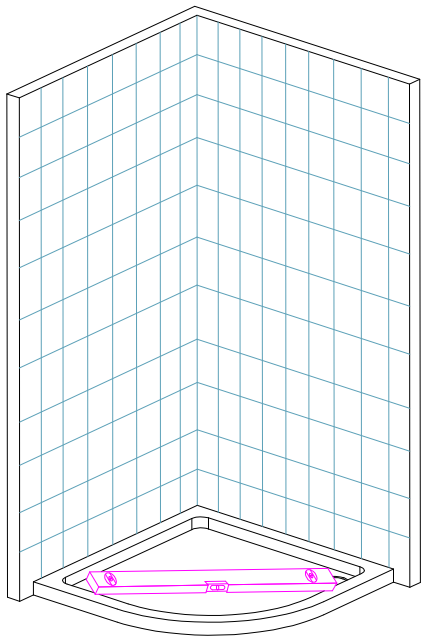

2

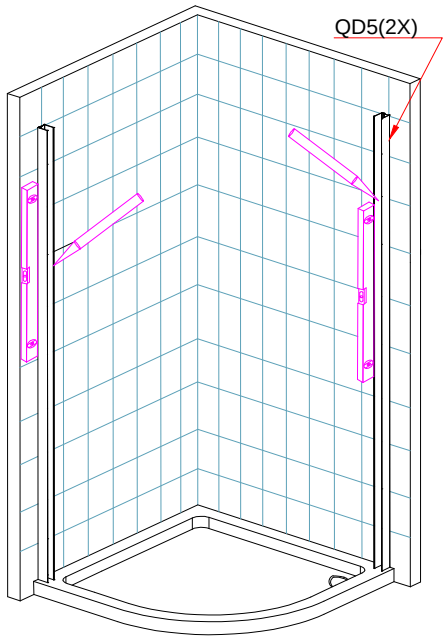

3

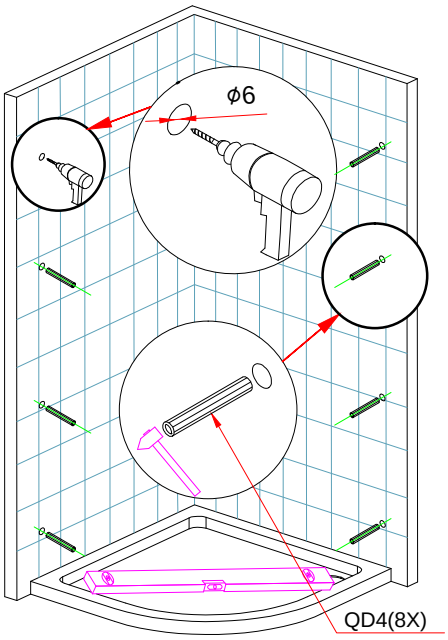

4

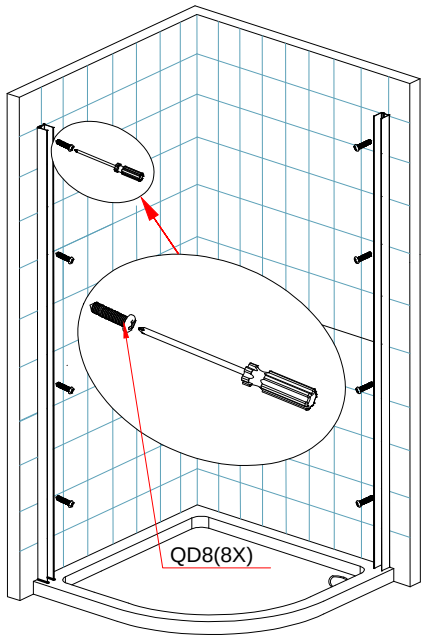

5

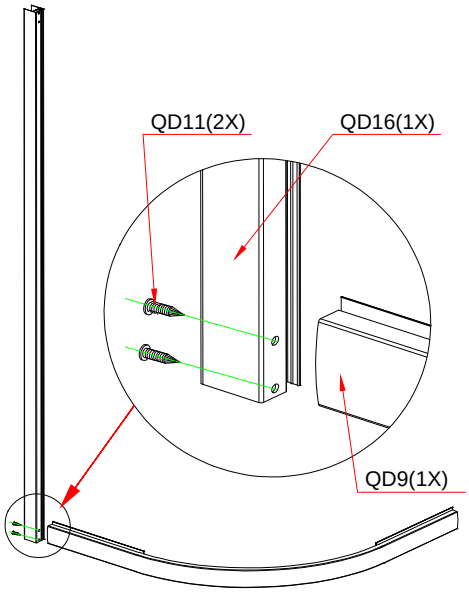
QD11(2X)
QD16(1X)
QD9(1X)

6

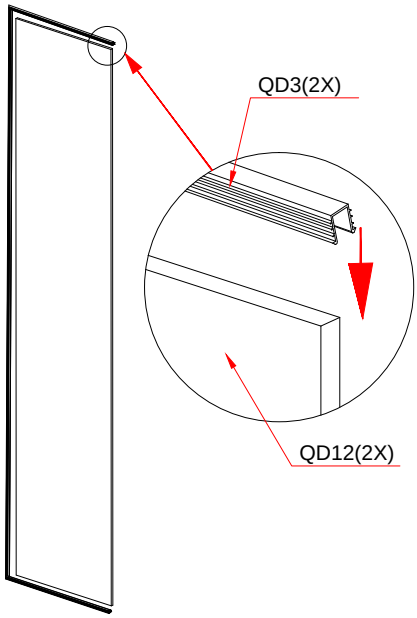
QD3(2X)
QD12(2X)

7

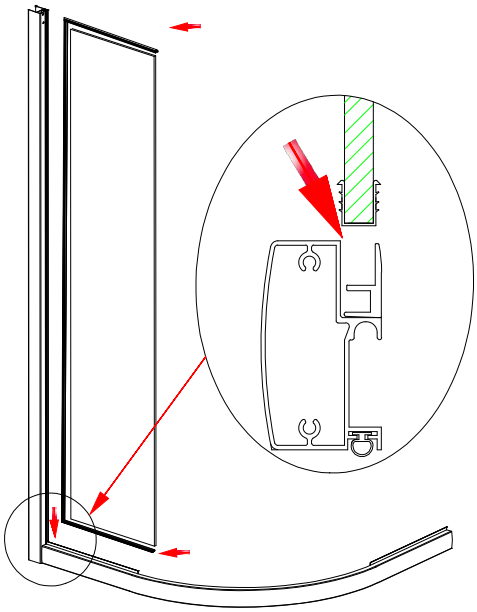

8

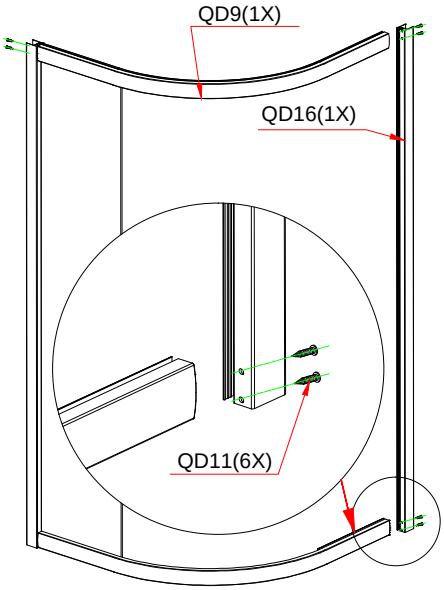
QD9(1X)
QD16(1X)
QD11(6X)

9

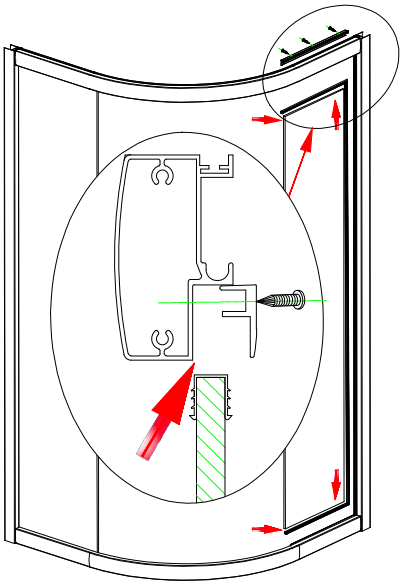

10

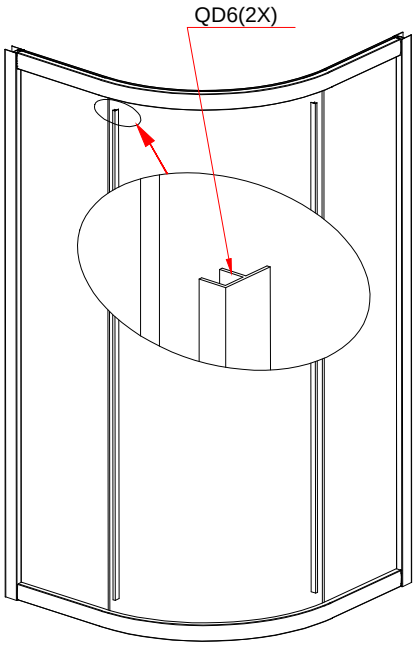
QD6(2X)

11

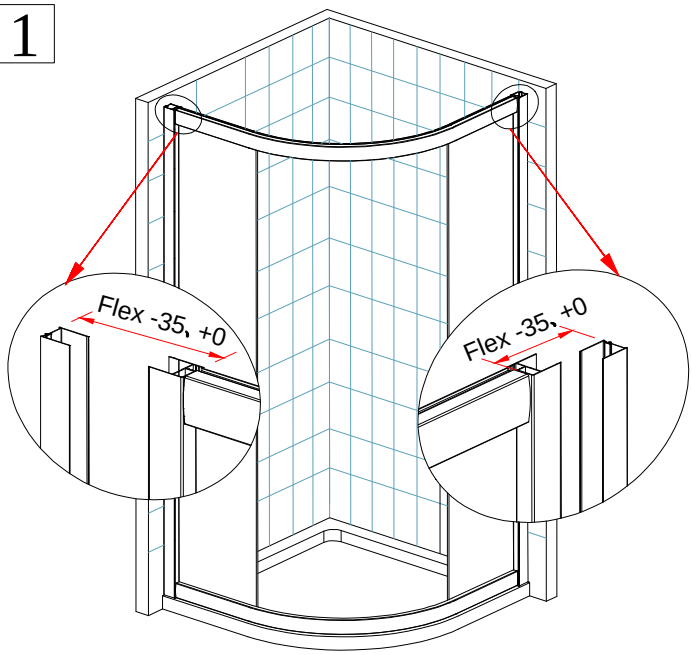

12

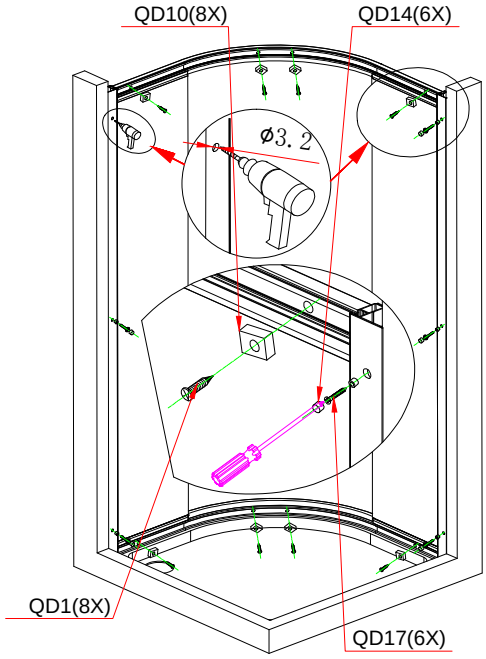

13

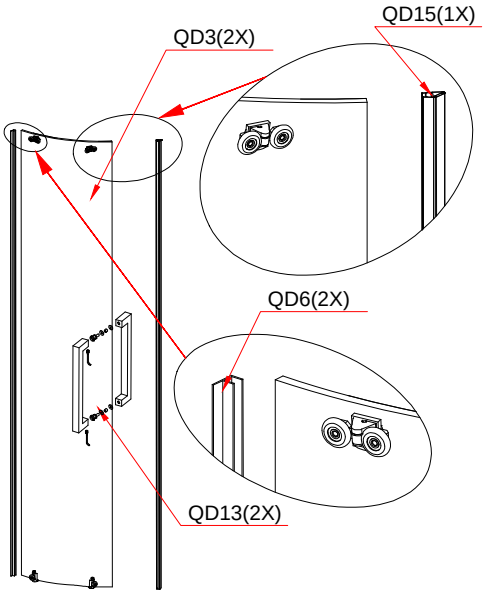

14

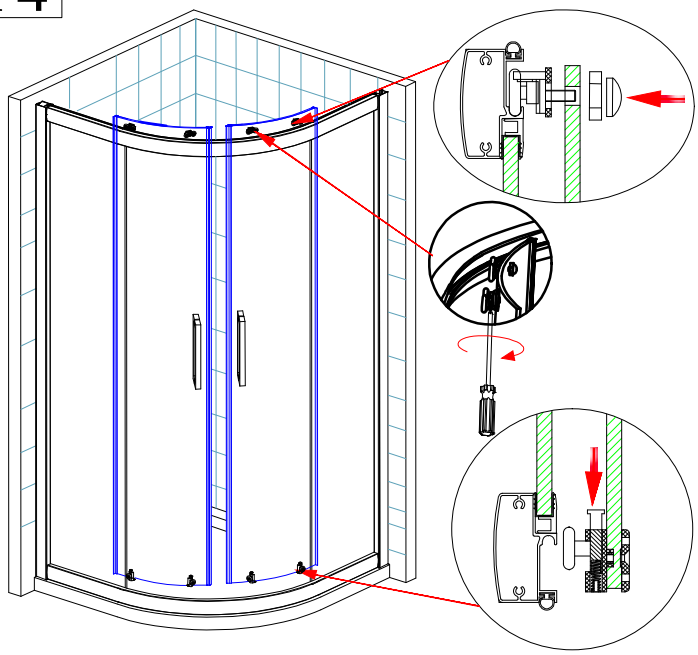

15

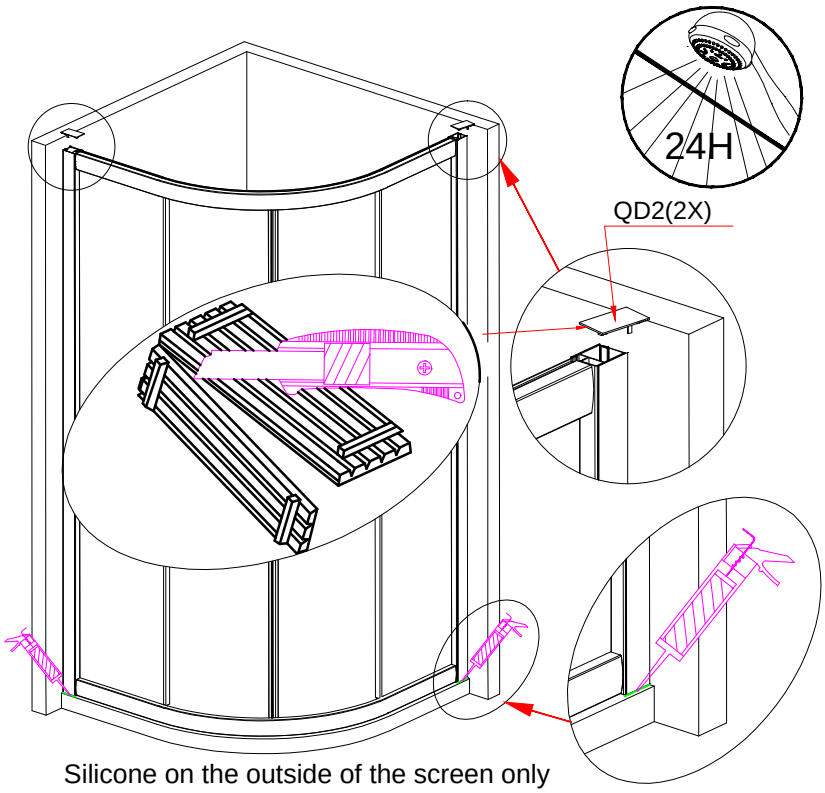

Silicone on the outside of the screen only

Cleaning & Maintenance

Don’t clean the shower enclosure with irritant detergent such as alcohol,bleach or other chemical cleaners.

Only clean with warm soapy water.

After the installation is completed,should you find that there is notable noise when the glass door moves,you may add a small quantity of lubricant onto the roller wheel,slipping hook and the track.

Helpline: 01452 317890