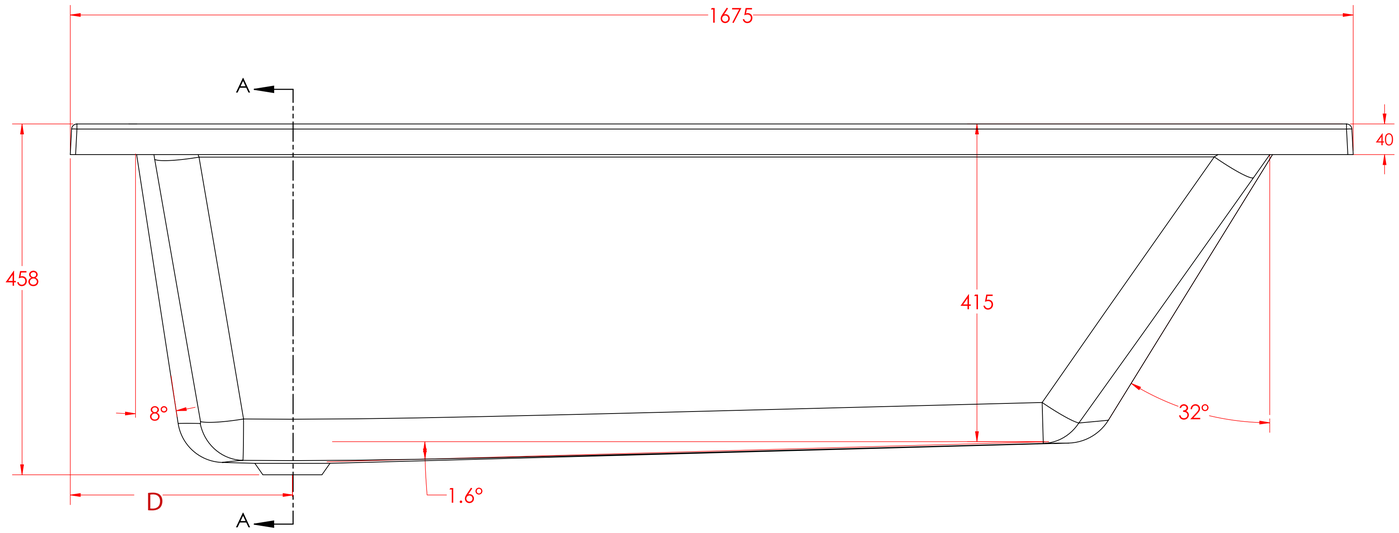

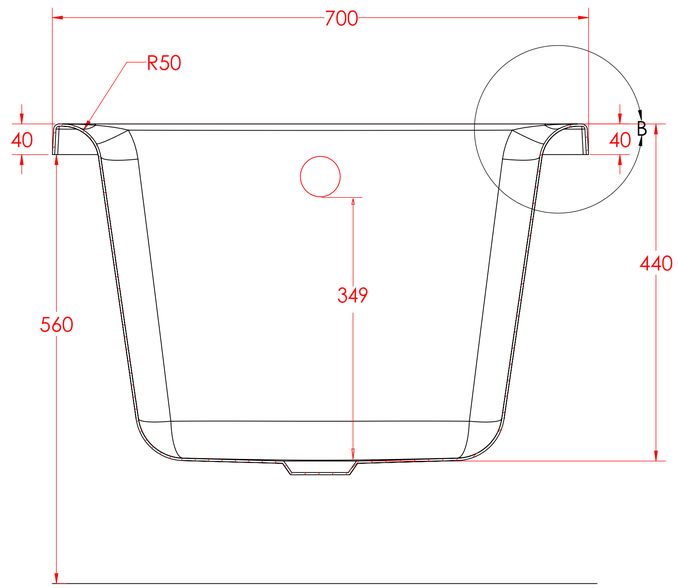

SECTION A-A
SCALE 1 : 4

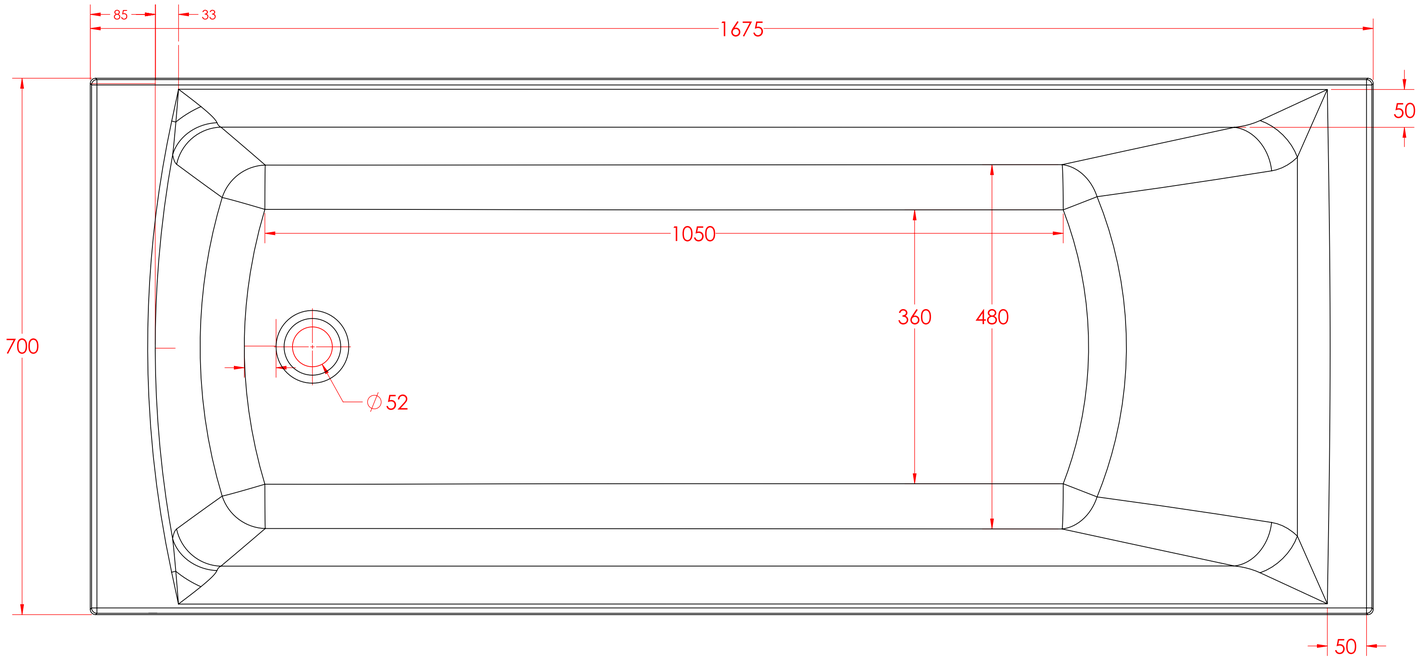

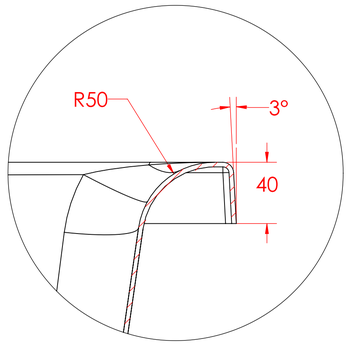

DETAIL B
SCALE 1 : 2

Eastbrook

Rockall 1675x700x440