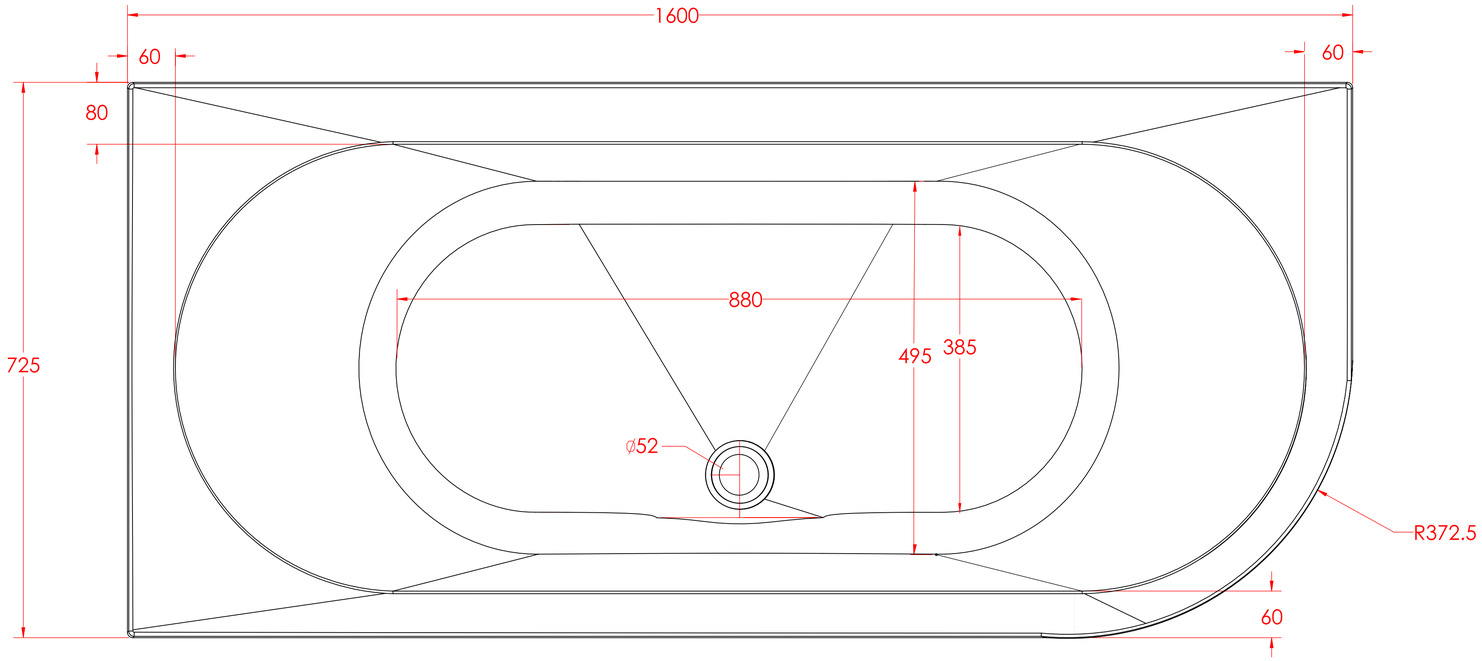

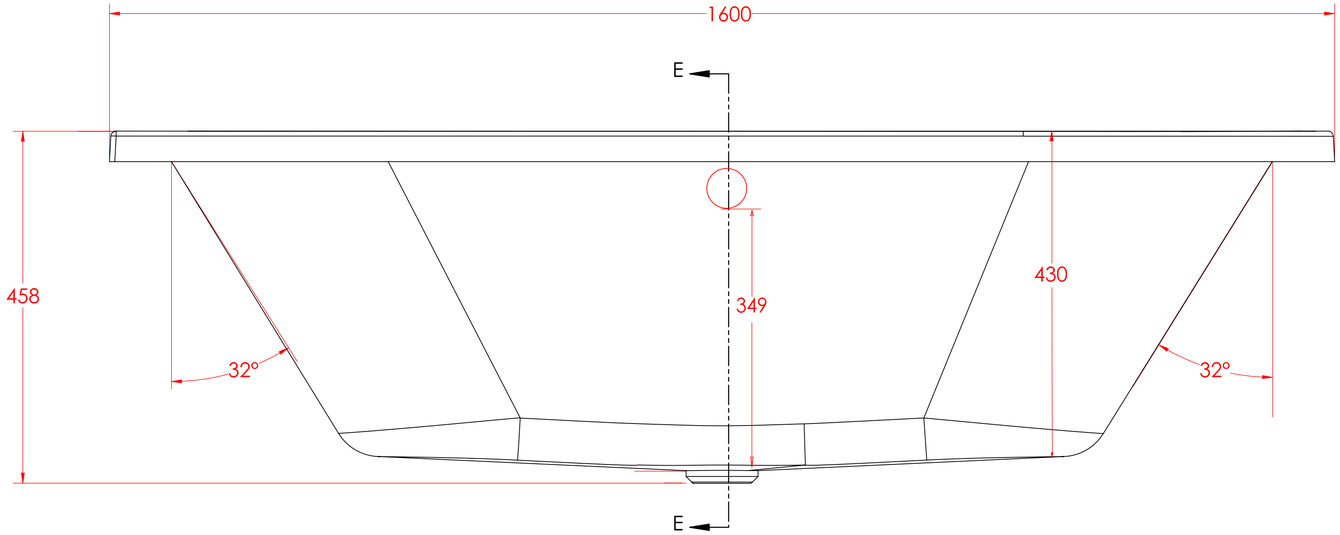

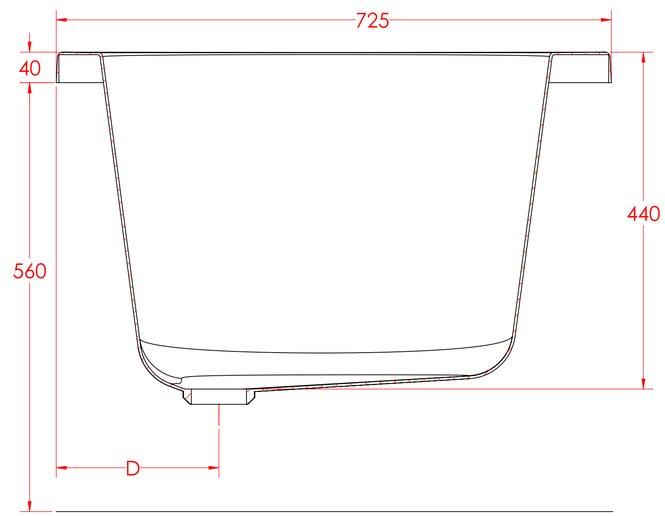

SECTION E-E
SCALE 1 : 4

Eastbrook

LH BISCAY DE 1600x725x440