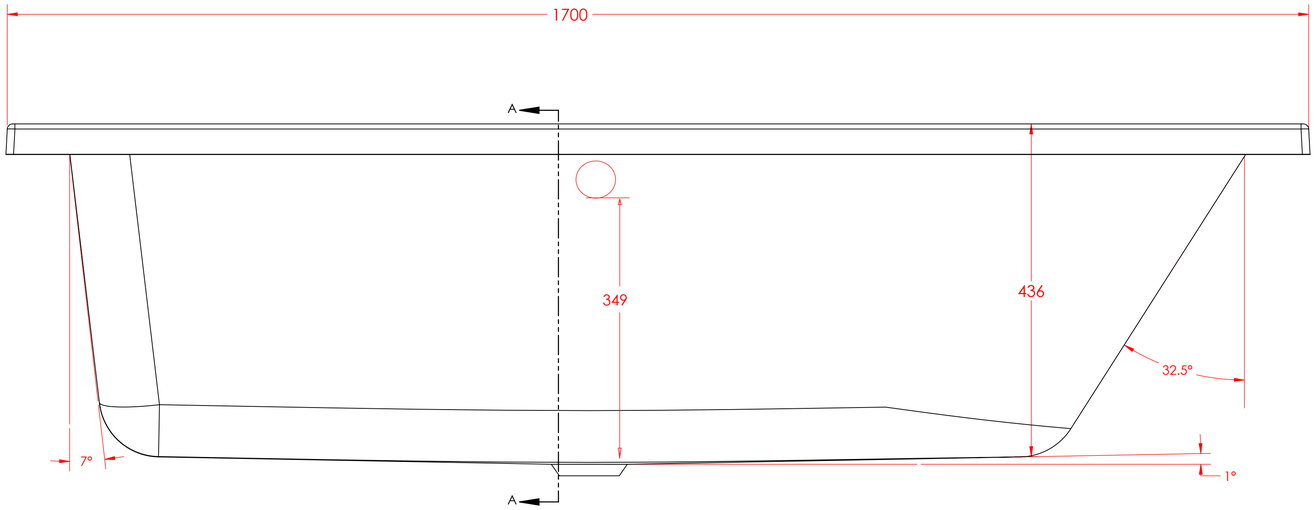

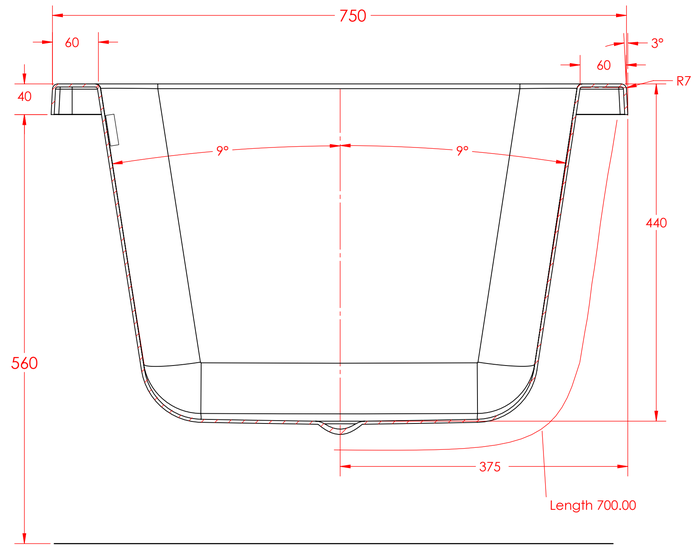

SECTION A-A
SCALE 1 : 4

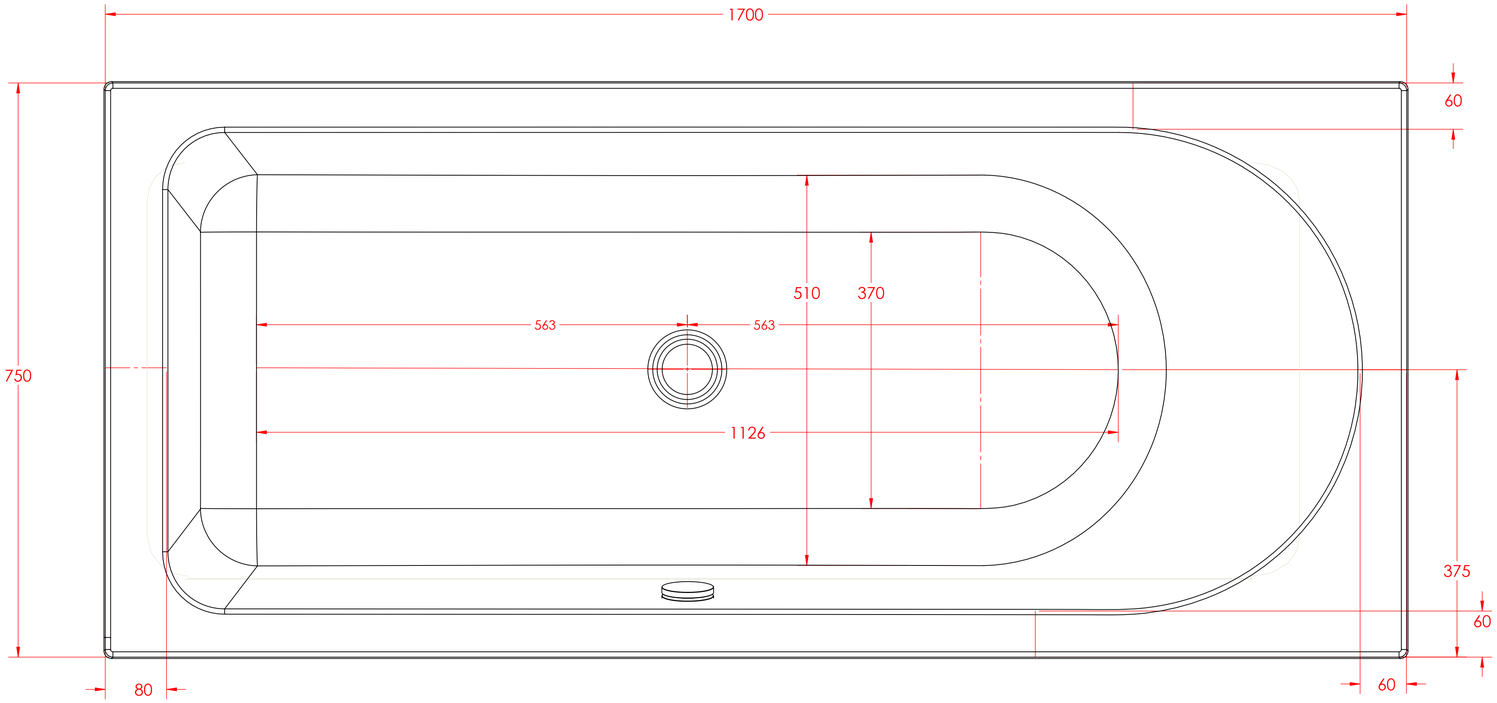

Eastbrook

BISCAY SHOWER LH 1700 x750 x440mm