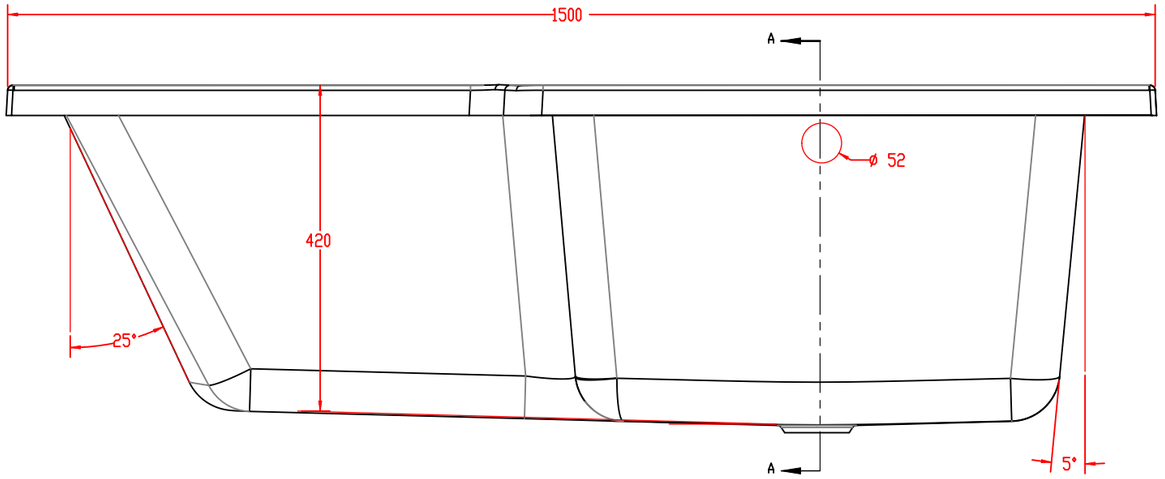

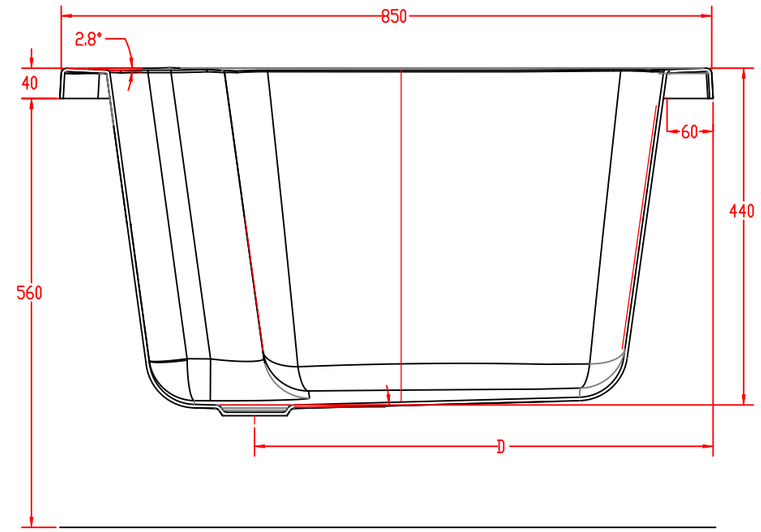

SECTION A-A
SCALE 1 : 4

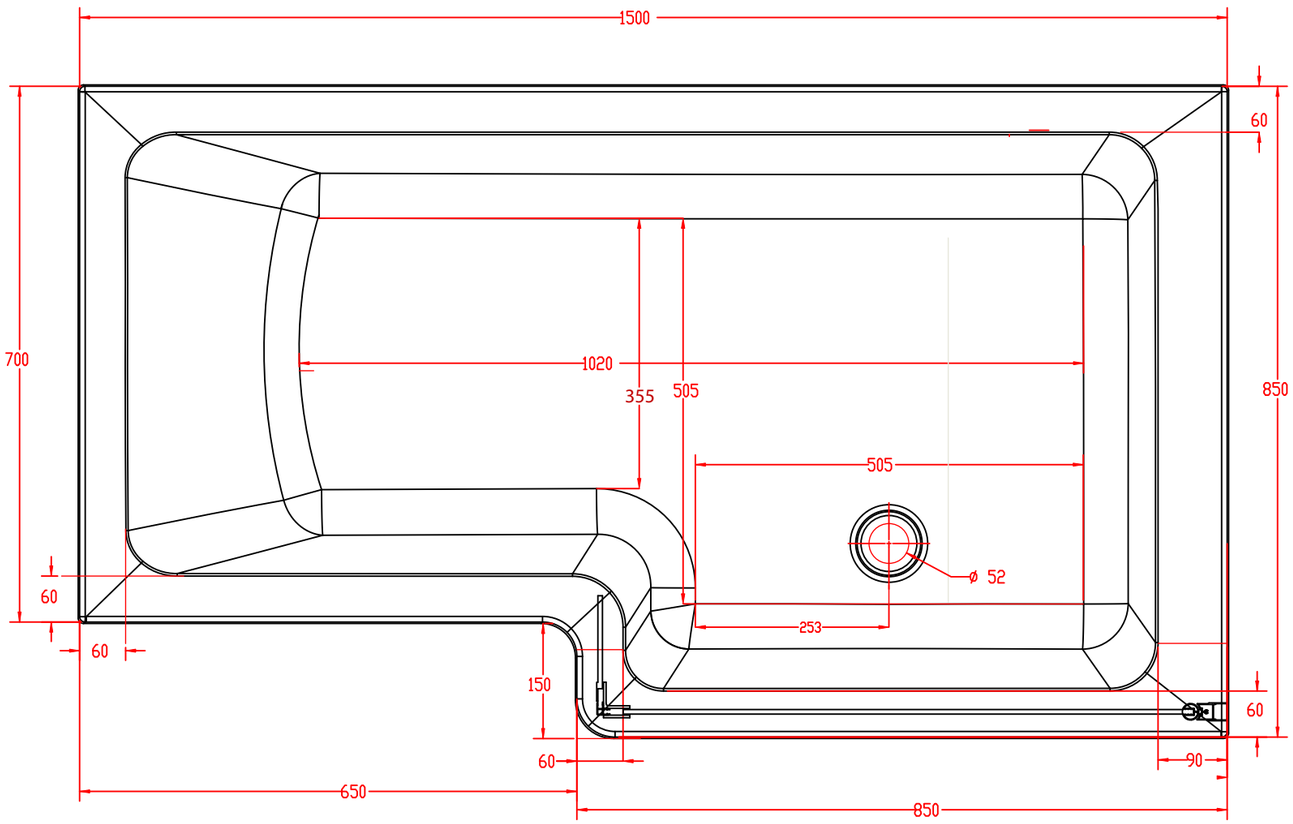

Eastbrook

PORTLAND L-SHAPE RH 1700 x 850mm