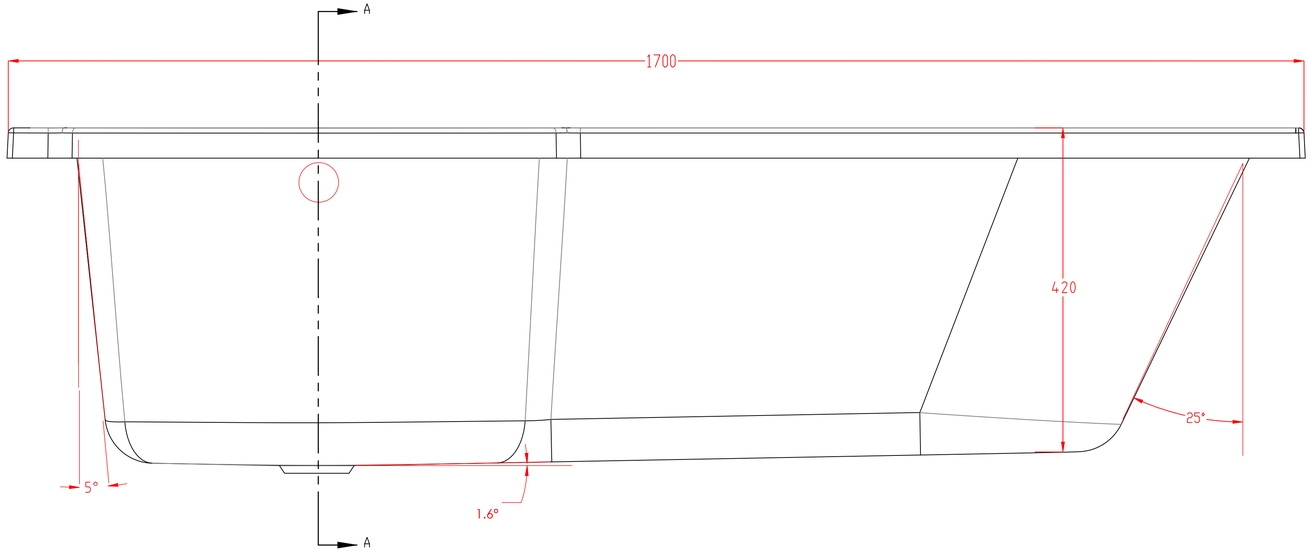


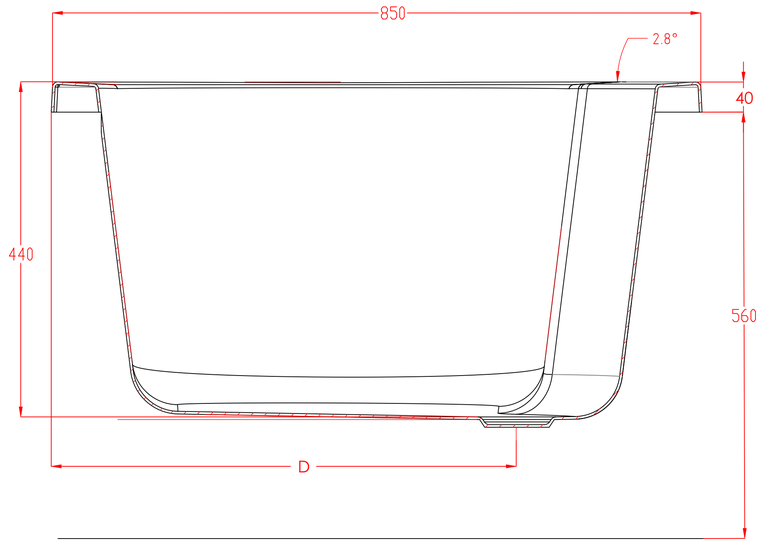


SECTION A-A
SCALE 1 : 4

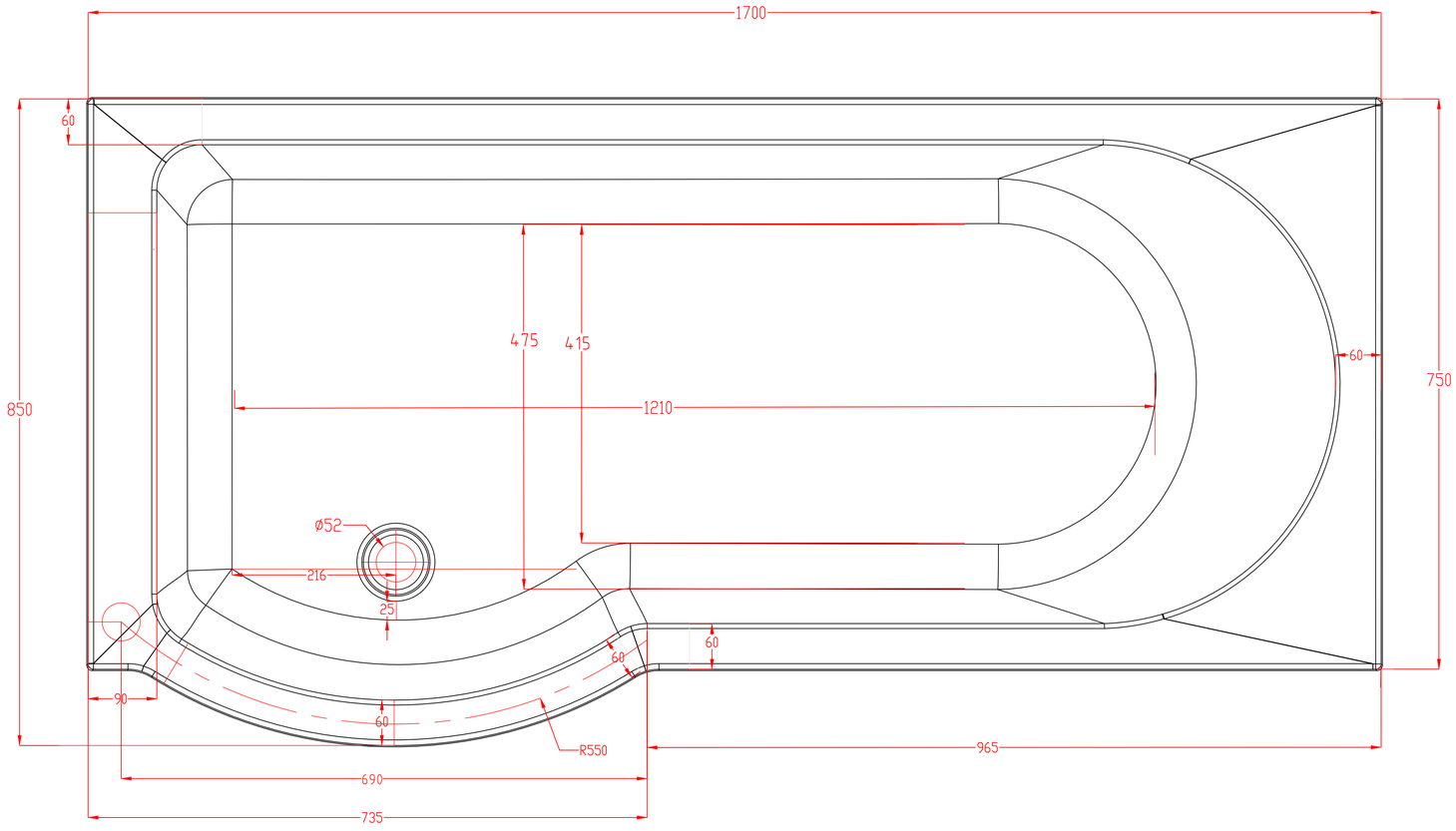


Eastbrook

PORTLAND P-SHAPE LH 1700x850mm