Bathroom Furniture Instructions and Maintenance

PLEASE READ BELOW NOTES BEFORE INSTALLING YOUR VANITY UNITS.

- Use protective gloves and eye protection at all times
- Please use qualified plumbers to install the vanity unit
- 2 people are required to install the units
- Check the parts are fully supplied
- Never install products or components which looks damaged
- Hinges for doors and sliders for drawers may need to be checked and adjusted to achieve proper position after installation
- Please avoid direct sunlight as this will affect the painted surface colour change
- If fixing to a stud or panelled wall, proper framework is required to support a wall hung unit

NECESSARY TOOLS (not supplied)

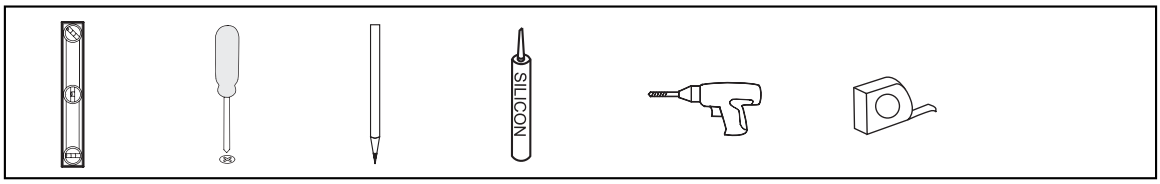

1. Installation for Floorstanding Vanity Units

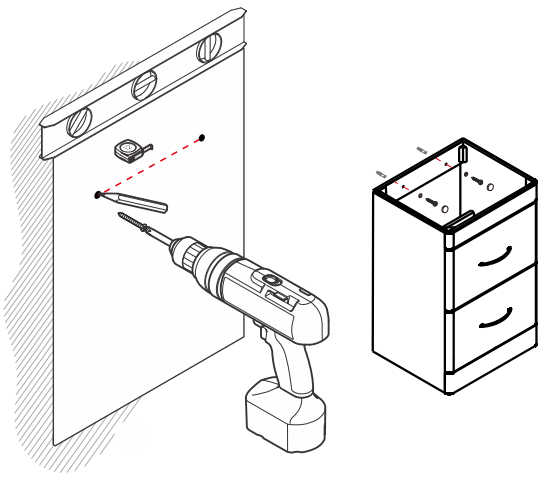

Mark the two holes levelly on the wall.

Drill the holes using proper size drill bit.

Insert expansion wall plug or appropiate alternative wall fixing.

Screw in the tapping screws.

Add cover caps on the screws.

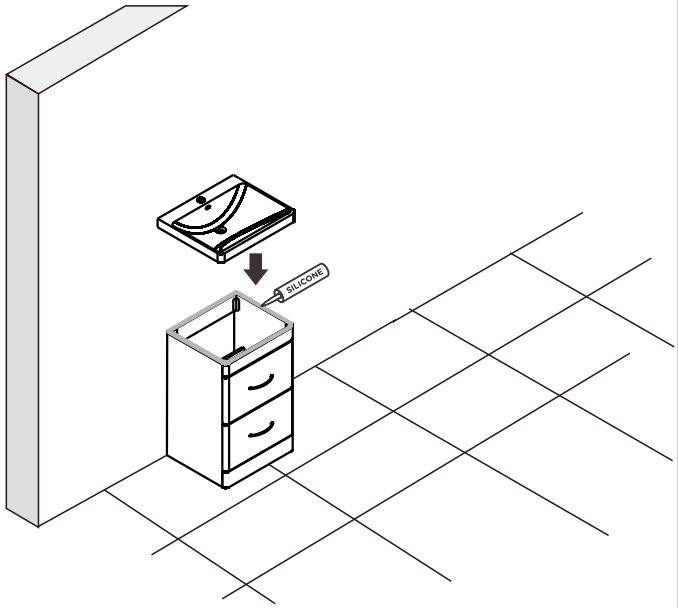

When fitting the basin to the unit, adequate silicone is required between basin and unit to prevent potential water ingress.

2. Installation for Wall Hung Vanity Units

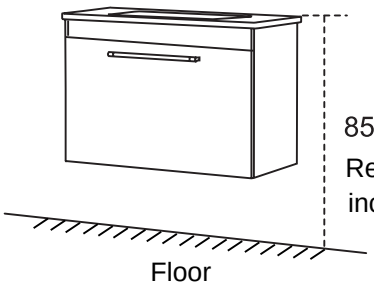

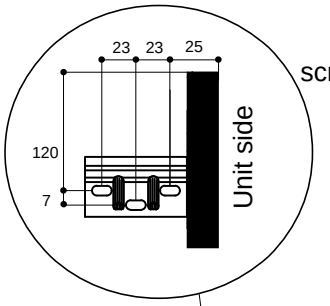

screw holes location

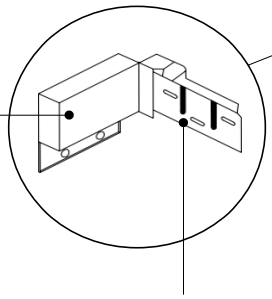

This part has been pre-fitted on vanity unit

This wall clip is required to be fixed onto wall

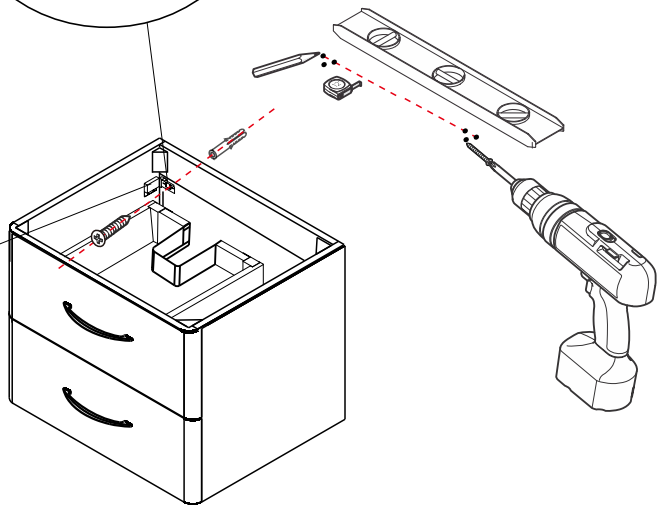

Mark the holes levelly on the wall.

Drill the holes using proper size drill bit.

Insert expansion wall plug or appropiate alternative wall fixing.

Screw in the tapping screws.

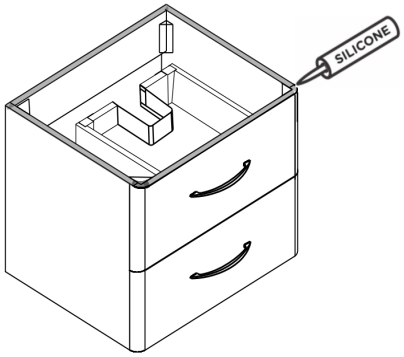

When fitting the basin to the unit, adequate silicone is required between basin and unit to prevent potential water ingress.

Components Adjustment

1. Drawer slider adjustment

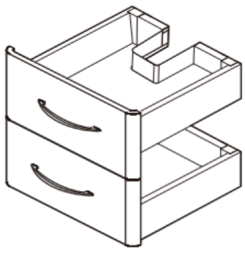

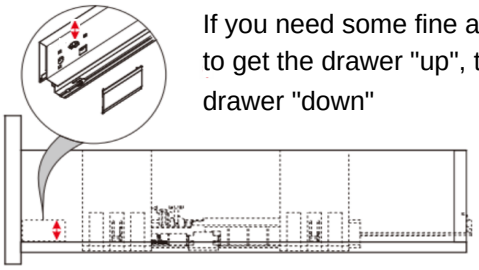

If you need some fine adjustment, turn the screw clockwise to to get the drawer "up", turn the screw anti-clockwise to get the drawer "down"

2. Soft closing hinge adjustment

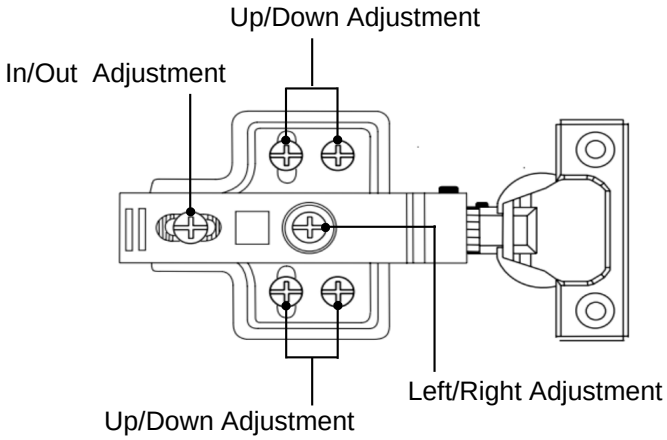

3. Wall hanging bracket adjustment

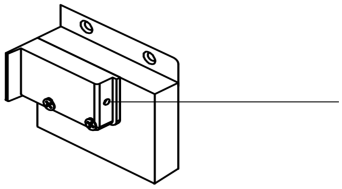

Turn the screw anti-clockwise to lengthen the hook's protrusion

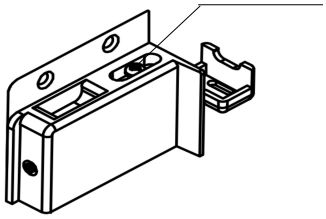

Once the vanity unit is fitted, if required, turn this screw clockwise for "down" and anti-clockwise for "up"

Aftercare and Maintenance

- Make sure your bathroom is well ventilated
- Do not use abrasive cleaning materials which will hurt the surface finish
- Do not use any cleaning with acidic substances or soda. We suggest use cleaning agents with a PH of 7
- The vanity unit must be kept dry and not subject to continuous moisture
- All spillages and splashes must be wiped off
- Do not lean on fully opened doors or drawers
- Check the hinges and sliders every 6 months and any loose screws must be tightened

Technical Helpline: 01452 317890 (Open times: Mon - Fri 8:00am-17:pm)

Email: technical@eastbrookco.com

Eastbrook Road, Gloucester GL4 3DB