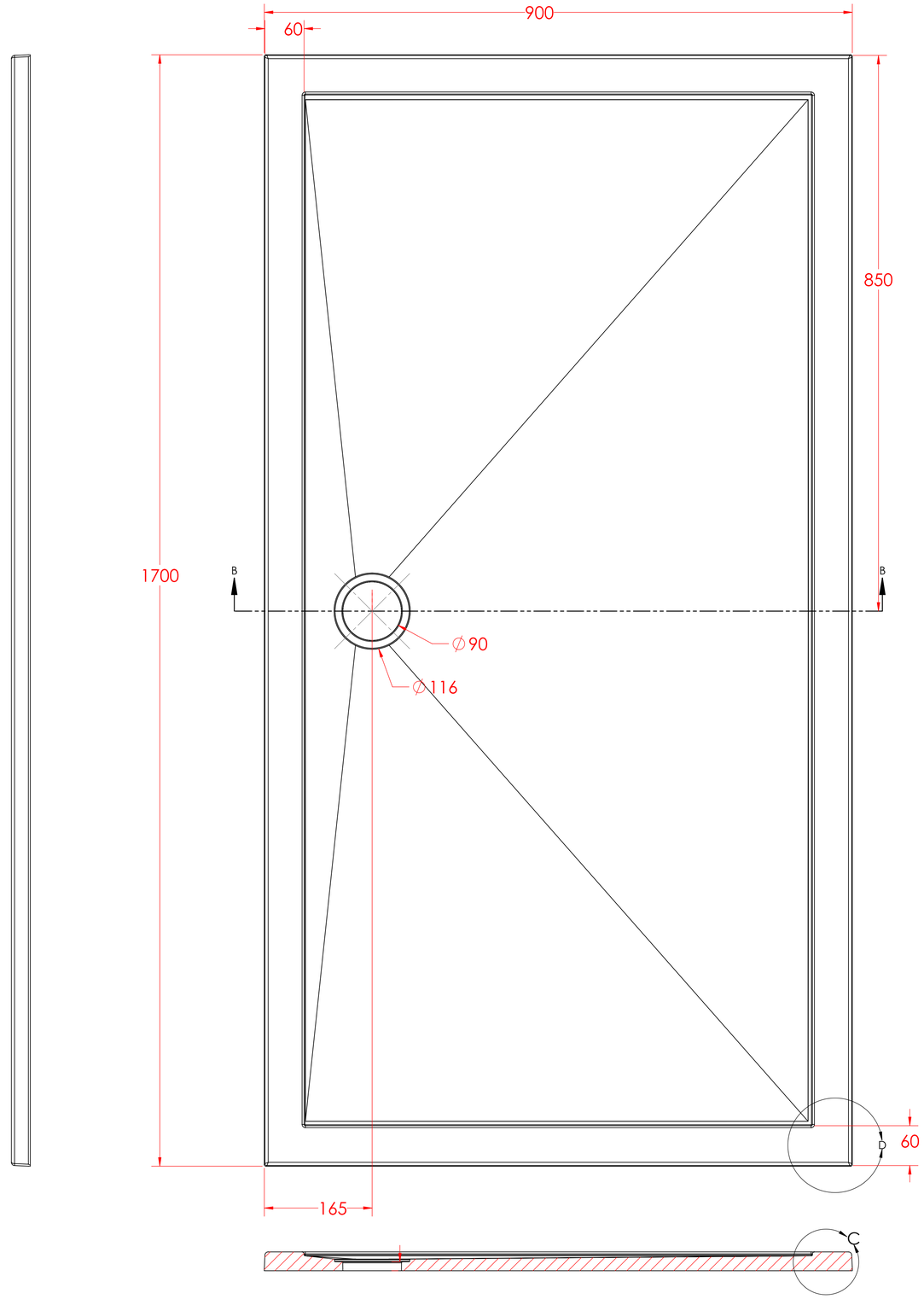

SECTION B-B
SCALE 1 : 4

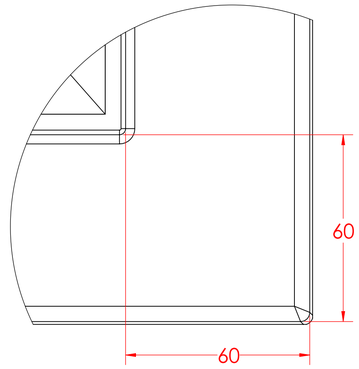

DETAIL D
SCALE 1 : 1

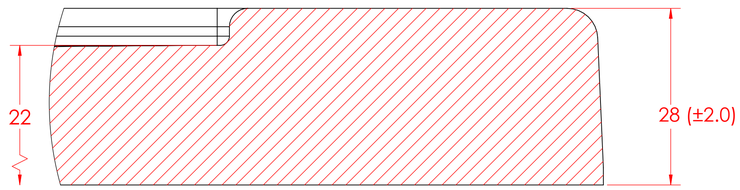

DETAIL C
SCALE 2 : 1

Eastbrook

Corsair Anti-Slip 1700 x 900 Shower Tray