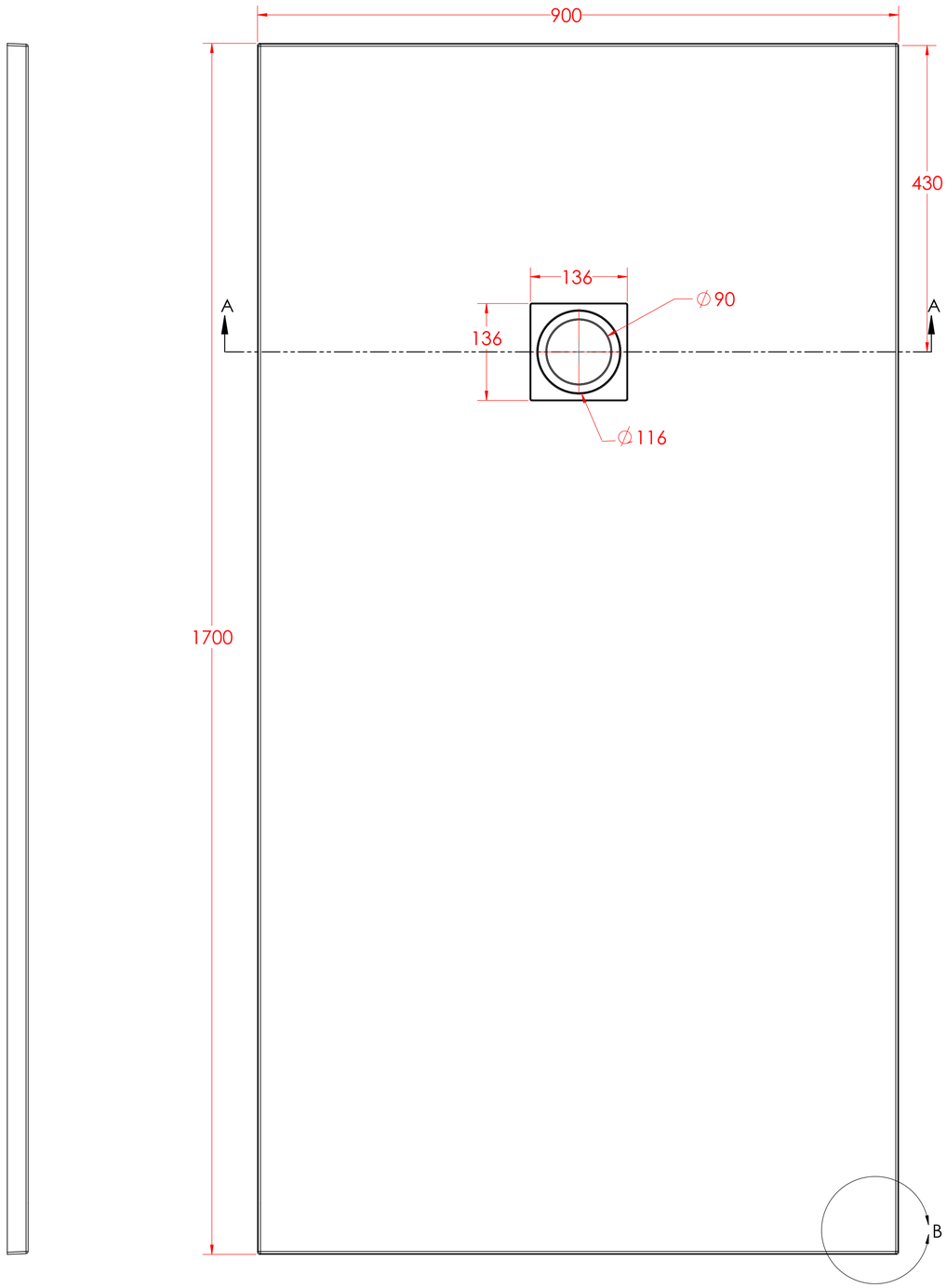

SECTION A-A
SCALE 1 : 4

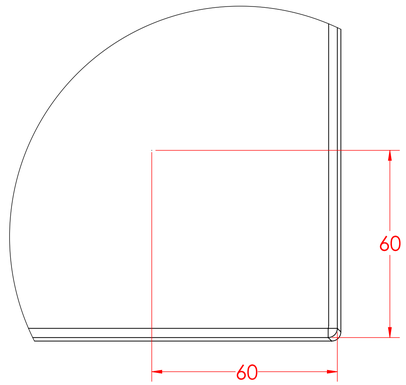

DETAIL B
SCALE 1 : 1

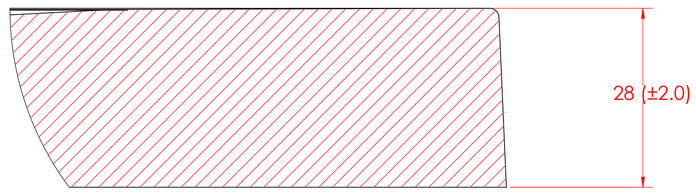

DETAIL C
SCALE 2 : 1

Eastbrook

Crossland 1700 x 900 Slate Tray