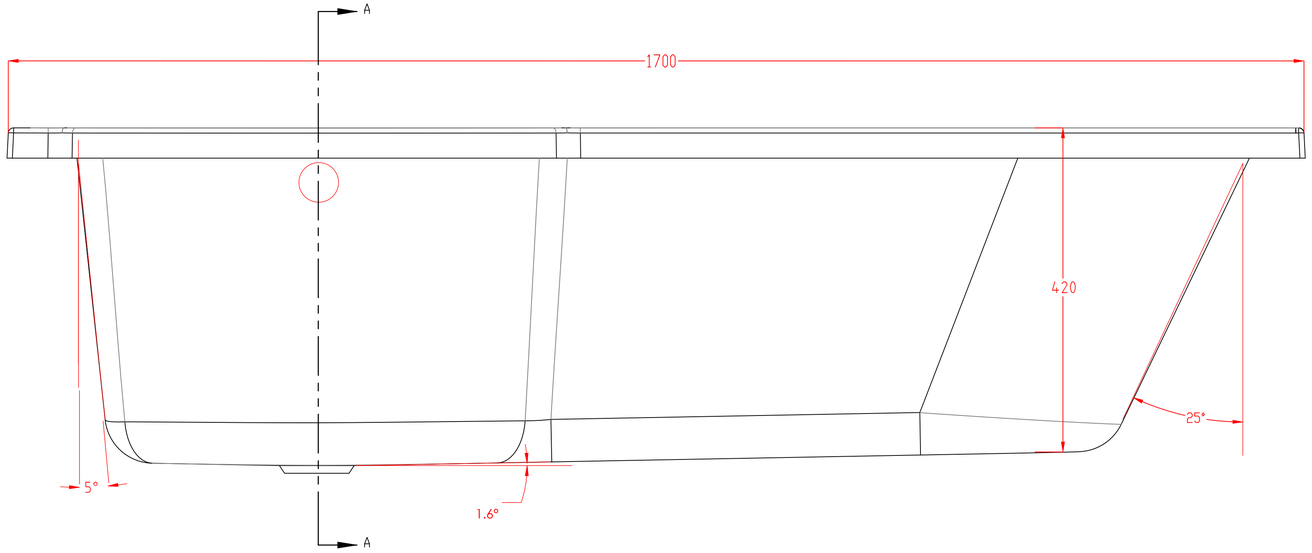

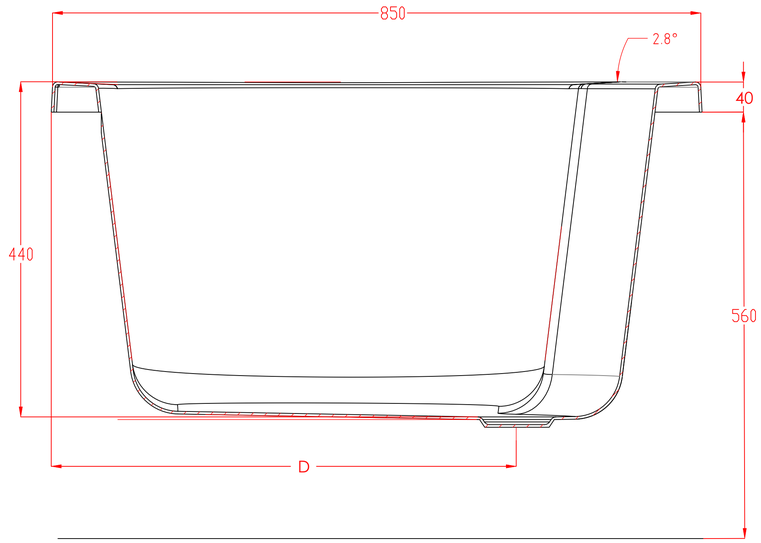

SECTION A-A
SCALE 1 : 4

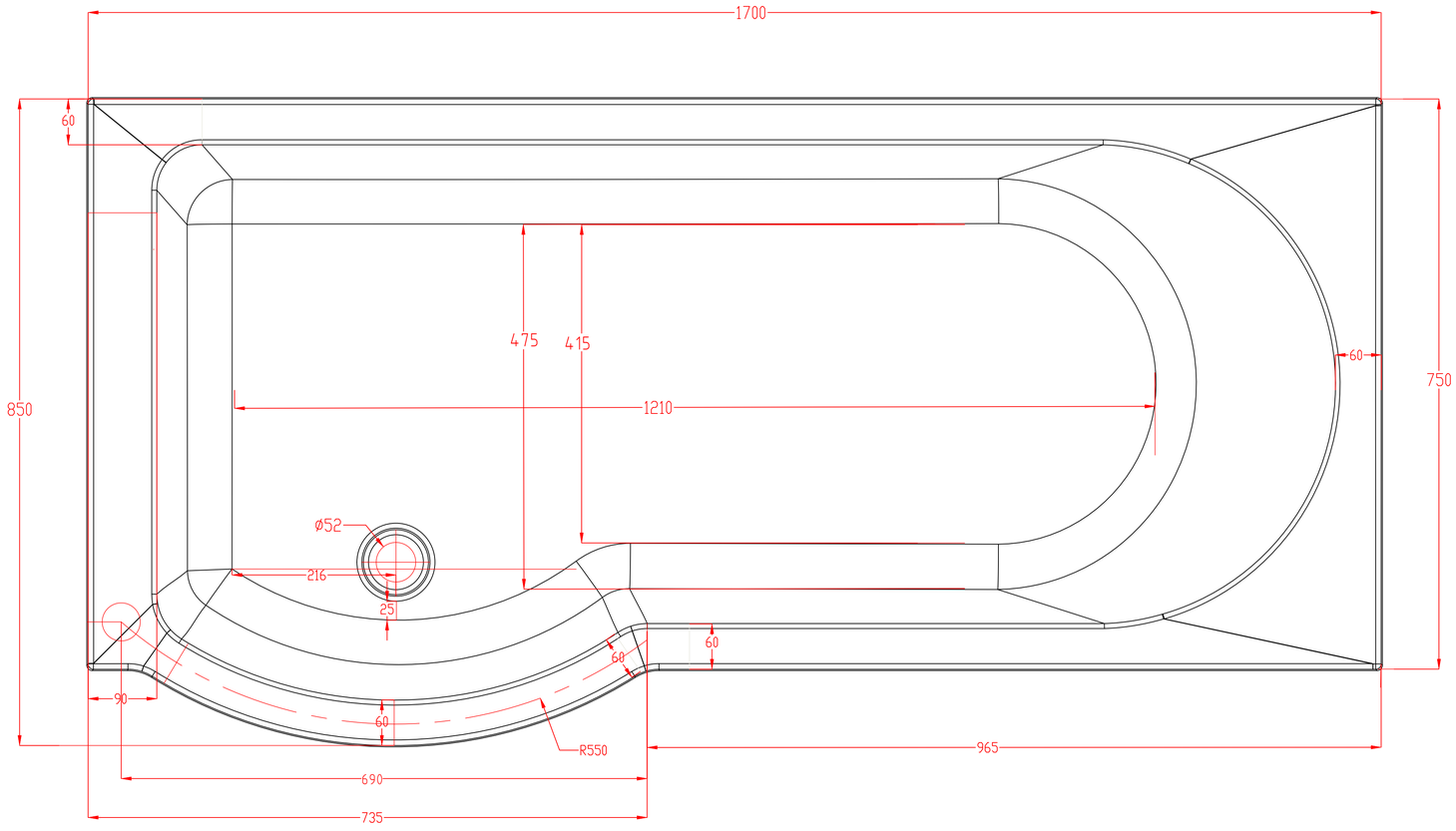

Eastbrook

PORTLAND P-SHAPE LH 1700x850mm