Eastbrook Road
Gloucester, GL4 3DB
01452 317800
www.eastbrooktrade.com

Eastbrook

DATASHEET

Image



General Information

Product:	25.7008
Description:	Keynsham Type 22 Panel Radiator 600 x 800 with Flat Designer Cover
Website Link:	(Click Here)
Product Type:	Radiator
Brand:	Eastbrook Company
Colour:	Matt Anthracite
Material:	Mild Steel
Height (mm):	600mm
Width (mm):	800mm
Net Weight (kg):	4kg
Product Range:	Keynsham Compact Panel

Product Specifications

Warranty:	10 Year(s)
BTU ΔT50°C:	4506
BTU ΔT60°C:	5671
Watts ΔT50°C:	1320
Watts ΔT60°C:	1663

Eastbrook Road
Gloucester, GL4 3DB
01452 317800
www.eastbrooktrade.com

Eastbrook

Drawing

Keynsham Flat Designer Cover - Type 22
Technical Drawing

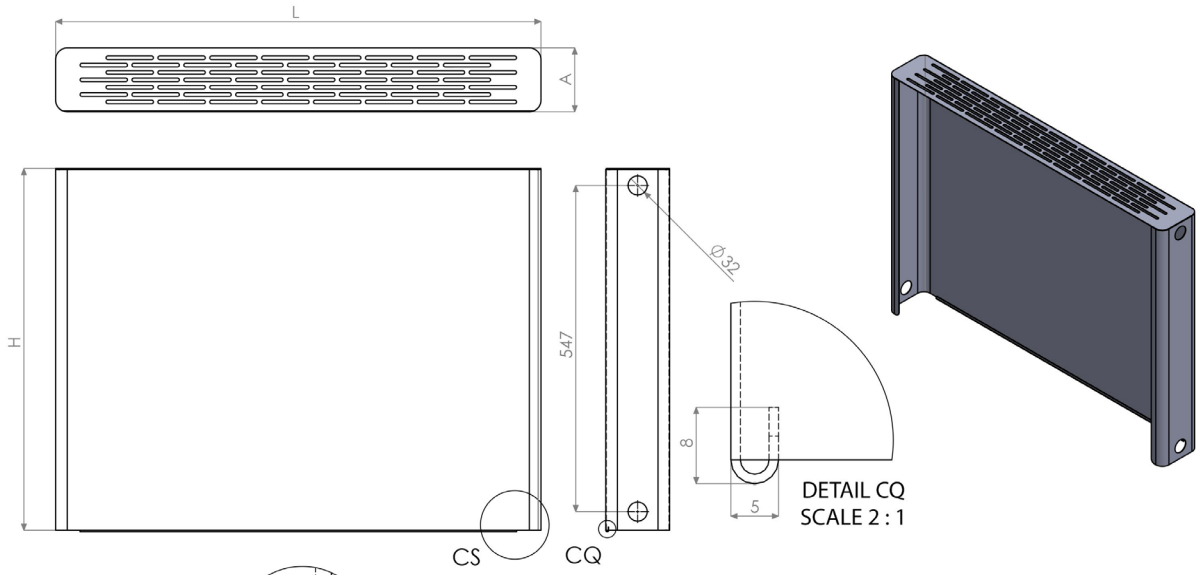

	L	H	A
600x400	414	606.6	107.1
600x500	514		
600x600	614		
600x800	814		
600x1000	1014		
600x1200	1214		

Eastbrook
Eastbrook Road, Gloucester GL4 3DB
Technical Helpline : 01452 317890
Mon - Fri / 8am - 5pm
Email : technical@eastbrookco.com