Eastbrook

TECHNICAL SPECIFICATION

PRODUCT NAME:

Cistern from low level Doc-M pack lever flush White

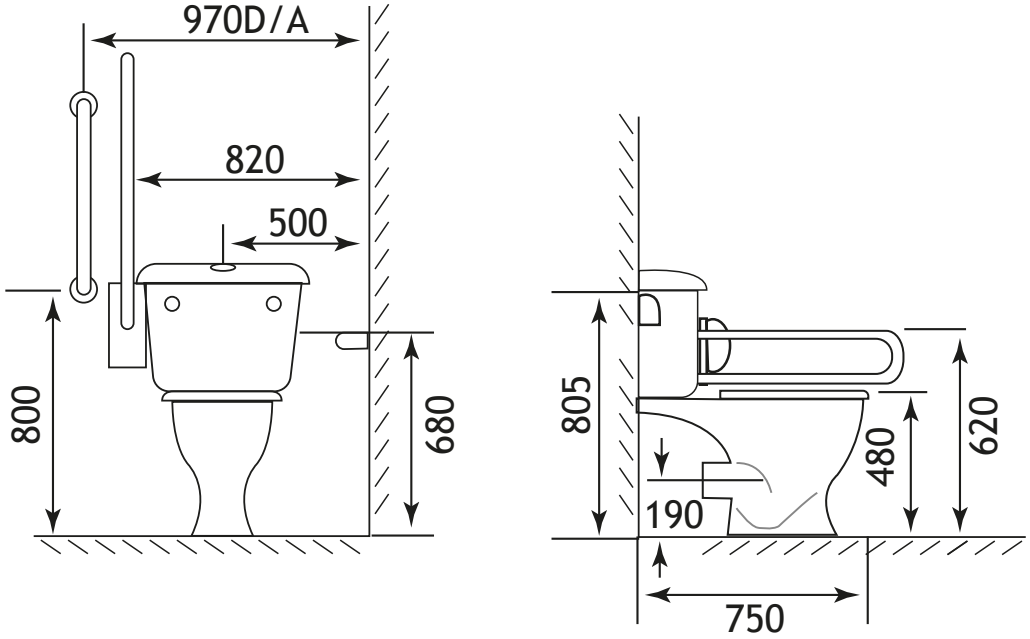

CODE:

27.0771

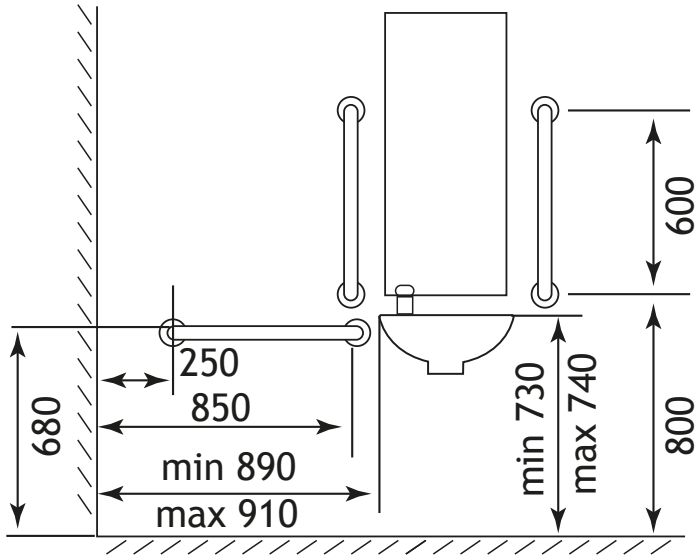

For Technical Enquiries

email: technical@eastbrookco.com
helpline: 01452 317890